All About

Servicing

OVER THE RANGE MICROWAVE OVENS

Models: FPBM189KF, FGBM185KF, FGBM185KW, FGBM185KB, FGBM187KW, FGBM187KB

FRIGIDAIRE™

White-Westinghouse

Gibson

Kelvinator

TAPPAN

©2011 Electrolux Home Products Inc.
10200 David Taylor Drive
Charlotte, NC 28262

Publication #5995563847 Part # 316439606 March 2011

Safe Servicing Practices

Avoid personal injury and/or property damage by observing important Safe Servicing Practices. Following are some limited examples of safe practices:

1. DO NOT attempt a product repair if you have any doubts as to your ability to complete the repair in a safe and satisfactory manner.

2. Always Use The Correct Replacement Parts as indicated in the parts documentation. Substitutions may defeat compliance with Safety Standards Set For Home Appliances. Do not exceed maximum recommended wattage on light bulb replacements. Doing so could blow fuses and/or damage transformers.

3. Before servicing or moving an appliance:
   - Remove power cord from the electrical outlet, trip circuit breaker to the OFF position, or remove fuse.

4. Never interfere with the proper operation of any safety device.

5. Use ONLY REPLACEMENT PARTS CATALOGED FOR THIS APPLIANCE. Substitutions may defeat compliance with Safety Standards Set For Home Appliances.

6. GROUNDING: The standard color coding for safety ground wires is GREEN, or GREEN with YELLOW STRIPES. Ground leads are not to be used as current carrying conductors. It is EXTREMELY important that the service technician reestablish all safety grounds prior to completion of service. Failure to do so will create a hazard.

7. Prior to returning the product to service, ensure that:
   - All electrical connections are correct and secure.
   - All electrical leads are properly dressed and secured away from sharp edges, high-temperature components, and moving parts.
   - All non-insulated electrical terminals, connectors, heaters, etc. are adequately spaced away from all metal parts and panels.
   - All safety grounds (both internal and external) are correctly and securely connected.
   - All panels are properly and securely reassembled.

© 2011 Electrolux Home Products, Inc.

Section 1 Basic Information

This Manual has been prepared to provide Electrolux Home Products Service Personnel with Operation and Service Information for the ELECTROLUX OVER THE RANGE MICROWAVE OVENS, FPBM189KF, FGBM185KF, FGBM185KW, FGBM185KB, FGBM187KW, FGBM187KB

It is recommended that service personnel carefully study the entire text of this manual so that they will be qualified to render satisfactory customer service.

Table of Contents

Section 1 Basic Information

Safe Servicing Practices 1-1
Table of Contents 1-2
Warnings and Safety Information 1-3
Precautions To Be Observed Before And During Servicing To Avoid Possible Exposure To Excessive Microwave Energy 1-4
Before Servicing 1-4
Danger High Voltage 1-4
Before Servicing 1-5
When Testing Is Completed 1-5
Microwave Measurement Procedure USA 1-6
Product Specification 1-7
Grounding Instructions 1-8
Electrical Requirements 1-8
Oven Diagram 1-9
Control Panel 1-10

Section 2 Operation

Operating Sequence Description 2-1
Off Condition 2-1
Cooking Condition 2-1
Power Level P-0 To P-90 Cooking 2-1
Ventilation Methods Hot Air Exhaust 2-2
Sensor Cooking Condition 2-2
Cooking Sequence 2-2
Oven Schematic-Off Condition 2-4
Oven Schematic-Cooking Condition 2-4
Component Description and Functions 2-5
Door Open Mechanism 2-5
Door Sensing And Secondary Interlock Switch 2-5
Monitor Switch 2-5
Thermal Cut-Out (Cavity) 2-5
Turntable Motor 2-5
Cooling Fan Motor 2-5
Hood Fan Motor 2-6
Thermostat (60°c on) 2-6
Antenna Motor 2-6
Cooktop Lamp 2-6

Section 3 Troubleshooting and Testing

Warnings and Cautions 3-1
Troubleshooting Guide Chart 3-2
Test Procedures 3-3

Section 4 Touch Control Panel Assembly

Outline Of Touch Control Panel 4-1
Humidity Sensor Circuit 4-1
Servicing For Touch Control Panel 4-2
Precautions For Using Lead-Free Solder 4-3

Section 5 Component Teardown

Warnings and Cautions 5-1
Hood Exhaust Louver Removal 5-2
Removal Of Oven From Wall 5-2
Outer Case Removal 5-2
Power Transformer Removal 5-3
Hood Fan Motor, Hood Duct, Oven Lamp Socket And hUMIDITY Sensor Removal 5-3
Magnetron Removal 5-4
High Voltage Rectifier And High Voltage Capacitor Removal 5-4
Hood Fan Thermostat (60°c On) Removal 5-5
Cooling Fan Motor Removal 5-5
Turntable Motor Removal 5-6
Atenna Motor Removal 5-6
Stirrer Cover And Stirrer Antenna Installation 5-7
Positive Lock® Connector (No-Case Type) Removal 5-7
Oven Lamp Removal 5-7
Right Panel Assembly and Power Unit Removal 5-8
Door Sensing Switch, Secondary Interlock Switch And Monitor Switch Removal 5-8
Door Sensing Switch, Secondary Interlock Switch, And Monitor Switch Adjustment 5-8
Door Replacement 5-9
Door Disassembly 5-10
Cook Top Lamp Removal 5-10

Section 6 Wire Diagrams

Circuit Diagrams 6-1
Wiring Diagram 6-2
Control Wiring Schematic 6-3
Printed Wiring Board 6-4

Section 7 Parts List

Oven Cabinet Parts List 7-2
Control Panel, Door, Misc. Parts List 7-6

WARNING

Certain initial parts are intentionally not grounded and present a risk of electrical shock only during servicing. Service personnel - do not contact the following parts while the appliance is energized:

Inverter unit, that includes high voltage capacitor, high voltage power transformer, high voltage rectifier, heat sink, etc., magnetron, high voltage harness etc.;
If provided, fan assembly, cooling fan motor.

All the parts marked "*" on parts list are used at voltages more than 250v.

Removal of the outer wrapper gives access to voltage above 250v.

All the parts marked "Δ" on parts list may cause undue microwave exposure, by themselves, or when they are damaged, loosened or removed.

WARNING

This service manual is intended for use by persons having electrical and mechanical training and a level of knowledge of these subjects generally considered acceptable in the appliance repair trade. Electrolux home products cannot be responsible, nor assume any liability, for injury or damage of any kind arising from the use of this manual.

WARNING

Never operate the oven until the following points are ensured.

(A) The door is tightly closed.
(B) The door brackets and hinges are not defective.
(C) The door packing is not damaged.
(D) The door is not deformed or warped.
(E) There is no other visible damage with the oven.

Servicing and repair work must be carried out only by trained service personnel.

Precautions To Be Observed Before And During Servicing To Avoid Possible Exposure To Excessive Microwave Energy

1. Do not operate or allow the oven to be operated with the door open.
2. Make the following safety checks on all ovens to be serviced before activating the magnetron or other microwave source, and make repairs as necessary: (1) interlock operation, (2) proper door closing, (3) seal and sealing surfaces (arcing, wear, and other damage), (4) damage to or loosening of hinges and latches, (5) evidence of dropping or abuse.
3. Before turning on microwave power for any service test or inspection within the microwave generating compartments, check the magnetron, wave guide or transmission line, and cavity for proper alignment, integrity, and connections.
4. Any defective or misadjusted components in the interlock, monitor, door seal, and microwave generation and transmission systems shall be repaired, replaced, or adjusted by procedures described in this manual before the oven is released to the owner.
5. A microwave leakage check to verify compliance with the Federal Performance Standard should be performed on each oven prior to release to the owner.

Before Servicing

Before servicing an operative unit, perform a microwave emission check as per the Microwave Measurement Procedure outlined in this service manual.

If microwave emissions level is in excess of the specified limit, contact ELECTROLUX HOME PRODUCTS, INC. immediately.

If the unit operates with the door open, service person should:

1. Tell the user not to operate the oven.
2. Contact Electrolux HOME PRODUCTS, INC. and Food and Drug Administration's Center for Devices and Radiological Health immediately.

Service personnel should inform ELECTROLUX HOME PRODUCTS, INC. of any certified unit found with emissions in excess of 4mW/cm2. The owner of the unit should be instructed not to use the unit until the oven has been brought into compliance.

Danger High Voltage

Do not energize a microwave oven with the outer case cabinet removed, because a microwave oven generates high voltage in the circuit.

If you intend to operate the oven employing the high frequency switching power converter circuit, you should take special precautions to avoid an electrical shock hazard.

The high voltage transformer, high voltage capacitor and high voltage diode have energized high voltage potential of approximately 8KV.

The aluminium heat sink is connected to the switching power transistor collector pole, and has an energized high voltage potential of approximately 650V peak.

DO NOT ACCESS THE HIGH VOLTAGE TRANSFORMER, HIGH VOLTAGE CAPACITOR, HIGH VOLTAGE DIODE AND HEAT SINK WHEN THE POWER SUPPLY IS CONNECTED TO AN ELECTRICAL OUTLET.

WARNING

Microwave ovens contain circuitry capable of producing very high voltage and current. contact with THE following parts may result in a severe, possibly fatal, electrical shock.

Inverter unit, that includes High Voltage Capacitor, High Voltage Power Transformer, High Voltage Rectifier, Heat sink etc., and Magnetron, High Voltage Harness etc.. Read the Service Manual carefully and follow all instructions.

Before Servicing

1. Disconnect the power supply cord, and then remove outer case.
2. Open the door and block it open.
3. Discharge high voltage capacitor.

WARNING

Risk of electric shock. Discharge the highvoltage capacitor before servicing.

NOTE

To discharge the high voltage capacitor, wait for 60 seconds and then short-circuit the connection of the high-voltage capacitor (that is the connecting lead of the high-voltage rectifier) against the chassis with the use of an insulated screwdriver.

Whenever troubleshooting is performed, the power supply must be disconnected. It may, in some cases, be necessary to connect the power supply after the outer case has been removed, in this event:

1. Disconnect the oven power supply cord and then remove the outer case.
2. Open the door and block it open.
3. Discharge high voltage capacitor.
4. Disconnect leads to the primary of the inverter unit.
5. Ensure that these leads remain isolated from other components and oven chassis by using insulation tape.
6. After that procedure, reconnect the power supply cord.

When Testing Is Completed

1. Disconnect the power supply cord, and then remove outer case.
2. Open the door and block it open.
3. Discharge high voltage capacitor. (see warning and note to left)
4. Reconnect leads to the primary of the inverter unit.
5. Reinstall the outer case (cabinet).
6. Reconnect the power supply cord after the outer case is installed.
7. Run the oven and check all functions.

After repairing

1. Reconnect all leads removed from components during testing.
2. Reinstall the outer case (cabinet).
3. Reconnect the power supply cord after the outer case is installed.
4. Run the oven and check all functions.

   Microwave ovens should not be run empty. To test for the presence of microwave energy within a cavity, place a cup of cold water on the oven turntable, close the door and set the power to HIGH and then set the microwave timer for two (2) minutes. When the two minutes has elapsed (timer at zero) carefully check that the water is now hot. If the water remains cold carry out Before Servicing procedure and re-examine the connections to the component being tested.

   When all service work is completed and the oven is fully assembled, the microwave power output should be checked and microwave leakage test should be carried out.

Microwave Measurement Procedure

A. Requirements:

1) Microwave leakage limit (Power density limit): The power density of microwave radiation emitted by a microwave oven should not exceed 1 mW/cm^2 at any point 5 cm or more from the external surface of the oven, measured prior to acquisition by a purchaser, and thereafter (through the useful life of the oven), 5 mW/cm^2 at any point 5 cm or more from the external surface of the oven.
2) Safety interlock switches: Primary interlock switch shall prevent microwave radiation emission in excess of the requirement as above mentioned, secondary interlock switch shall prevent microwave radiation emission in excess of 5 mW/cm^2 at any point 5 cm or more from the external surface of the oven.

B. Preparation for testing:

Before beginning the actual measurement of leakage, proceed as follows:

1) Make sure that the actual instrument is operating normally as specified in its instruction booklet.
   Important:
   Survey instruments that comply with the requirement for instrumentation as prescribed by the performance standard for microwave ovens, 21 CFR 1030.10(c)(3)(i), must be used for testing.
2) Place the oven tray in the oven cavity.
3) Place the load of 275±15 ml (9.8 oz) of tap water initially at 20°±5°C (68°F) in the center of the oven cavity. The water container shall be a low form of 600 ml (20 oz) beaker with an inside diameter of approx. 8.5 cm (3-1/2 in.) and made of an electrically nonconductive material such as glass or plastic. The placing of this standard load in the oven is important not only to protect the oven, but also to insure that any leakage is measured accurately.
4) Set the cooking control on Full Power Cooking Mode.
5) Close the door and select a cook cycle of several minutes. If the water begins to boil before the survey is completed, replace it with 275 ml of cool water.

C. Leakage test:

Closed-door leakage test (microwave measurement)

1) Grasp the probe of the survey instrument and hold it perpendicular to the gap between the door and the body of the oven.
2) Move the probe slowly, not faster than 1 in./sec. (2.5 cm/sec.) along the gap, watching for the maximum indication on the meter.
3) Check for leakage at the door screen, sheet metal seams and other accessible positions where the continuity of the metal has been breached (eg., around the switches, indicator, and vents). While testing for leakage around the door pull the door away from the front of the oven as far as is permitted by the closed latch assembly.
4) Measure carefully at the point of highest leakage and make sure that the highest leakage is no greater than 4 mW/cm^2, and that the primary interlock switch and secondary interlock switch do turn the oven OFF before any door movement.

NOTE: After servicing, record data on service invoice and microwave leakage report.

Product Specification

Item	Description
Power Requirements	(USA)120 Volts / 14 Amperes 60 Hertz Single phase, 3 wire grounded
Power Output	1000 watts (IEC 705 Test Procedure) Operating frequency of 2450MHz
Case Dimensions (excluding handle)	Width 29-15/16" Height 17-1/16" Depth 18 15/32" (Not including the door handle)
Cooking Cavity Dimensions (1.8 Cubic Feet)	Width 22-1/2" Height 10-1/16" Depth 14-31/32" **NOTE: Internal capacity is calculated by measuring maximum width, depth and height. Actual capacity for holding food is less.**
Hood Lamp	20 Watt x 2 incandescent light bulb
Oven Cavity Light	20W x 1 incandescent light bulb
Weight	Approx. 61. lbs.
Hood fan	Approx. 300 C.F.M.
Control Complement	Touch Control System Clock (1:00 - 12:59) Timer (0 - 99 minutes 99 seconds) Microwave Power for Variable Cooking Repetition Rate; Full power throughout the cooking time Approx. 90% of FULL Power Approx. 80% of FULL Power Approx. 70% of FULL Power Approx. 60% of FULL Power Approx. 50% of FULL Power Approx. 40% of FULL Power Approx. 30% of FULL Power Approx. 20% of FULL Power Approx. 10% of FULL Power No power throughout the cooking time Light Hi/Lo/Off pad, Vent Hi/Lo/Off pad, Sensor Cook pad,Sensor Reheat pad, Chicken nuggets pad, Baked Potato pad, Popcorn pad, Veggies pad, Auto Cook pad, Auto Defrost pad, Auto Reheat pad, Snacks Menu pad, Keep Warm pad, Melt Soften pad, Timer on-off pad, User Pref pad, Turntable on-off pad, Power level pad, Add 30 Sec pad, START/Enter pad, STOP/Clear pad, Number pads, (Quick start pads)
Safety Standard	UL Listed. FCC Authorized DHHS Rules, CFR, Title 21, Chapter 1, Subchapter J

Grounding Instructions

This oven is equipped with a three prong grounding plug. It must be plugged into a wall receptacle that is properly installed and grounded in accordance with the National Electrical Code, local codes and ordinances. In the event of an electrical short circuit, grounding reduces the risk of electric shock by providing an escape wire for the electric current.

WARNING

Improper use of the grounding plug can result in a risk of electric shock.

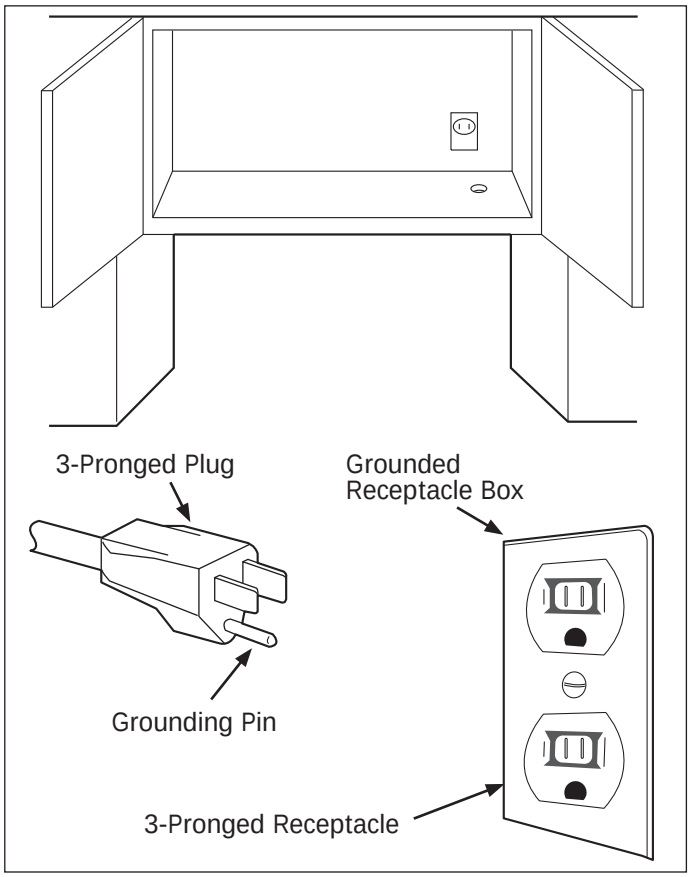

Electrical Requirements

The oven is equipped with a 3-prong grounding plug. DO NOT UNDER ANY CIRCUMSTANCES CUT OR REMOVE THE GROUNDING PIN FROM THE PLUG. The power supply cord and plug must be connected to a separate 120 Volt AC, 60 Hz, 15 Amp. or more dedicated line, using a grounded receptacle. When installing this appliance, observe all applicable codes and ordinances. A short power-supply cord is provided to reduce risks of becoming entangled in or tripping over a longer cord. Where a two-pronged wall-receptacle is encountered, it is the personal responsibility and obligation of the customer to contact a qualified electrician and have it replaced with a properly grounded three-pronged wall receptacle or have a grounding adapter properly grounded and polarized.

If an extension cord must be used, it should be a 3-wire, 15 amp. or more cord. Do not drape over a countertop or table where it can be pulled on by children or tripped over accidentally.

Oven Diagram

1. Microwave oven door with see-through window
2. Door hinges
3. Waveguide cover: DO NOT REMOVE.
4. Turntable motor shaft
5. Microwave oven light
   It will light when microwave oven is operating or door is open.
6. Rack holders
7. Safety door latches
   The microwave oven will not operate unless the door is securely closed.
8. Handle
9. Light Hi/Lo/Off pad
   Press the Light Hi/Lo/Off pad once for high, twice for low and three times to turn off the light.
10. Vent Hi/Lo/Off pad
    Press the Vent Hi/Lo/Off pad once for high speed, twice for low speed and three times to turn off the fan.
11. Control panel
12. Time display: Digital display, 99 minutes, 99 seconds
13. Ventilation openings
14. Removable turntable
    The turntable will rotate clockwise or counterclockwise. Only remove for cleaning.
15. Removable turntable support
    First, carefully place the turntable support in the motor shaft in the center of the microwave oven floor. Then, place the turntable on the turntable support securely.
16. Rack for 2-level cooking/ reheating
17. Light cover
18. Grease filters
19. Menu label

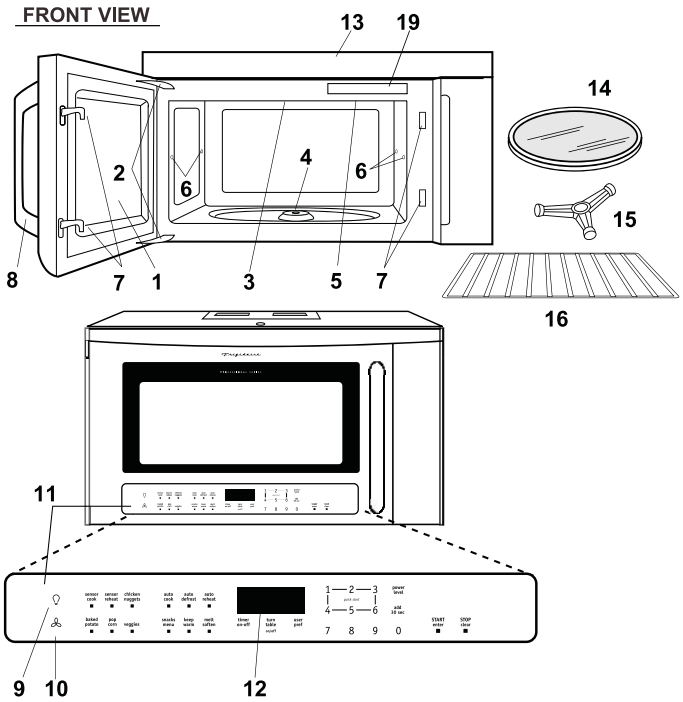

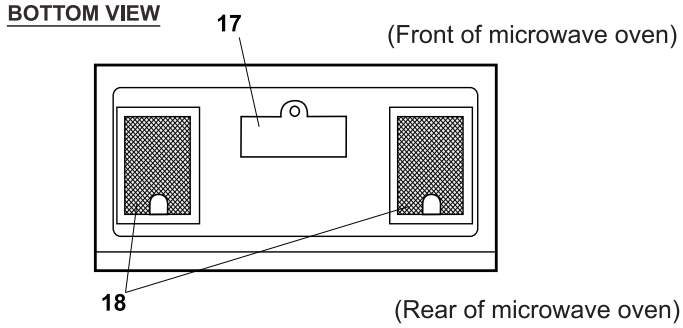

Control Panel

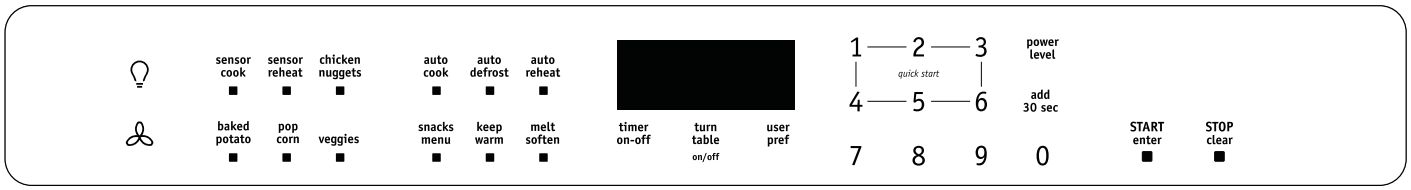

Operating Sequence Description

The following is a description of component functions during oven operation.

OFF CONDITION

Closing the door activates the door sensing switch and secondary interlock switch. (In this condition, the monitor switch contacts are opened.) When oven is plugged in, 120 volts AC is supplied to the control unit. (Figure 2-1).

1. The display will show “ENJOY YOUR OVEN PRESS CLEAR”. To set any program or set the clock, you must first touch the STOP/CLEAR button. The display will clear, and “ : “ appears.

COOKING CONDITION

Program desired cooking time touching the NUMBER pads. When the START pad is touched, the following operations occur:

1. The contacts of relays are closed and components connected to the relays are turned on as follows. (For details, refer to Figure 2-2)

RELAY	CONNECTED COMPONENTS
RY1	Oven Lamp / Fan motor / Antenna motor
RY2	Power Transformer
RY7	Turntable Motor

2. 120 volts A.C. is supplied to the primary winding of the power transformer and is converted to about 3.3 volts A.C. output on the filament winding, and approximately 2000 volts A.C. on the high voltage winding.
3. The filament winding voltage heats the magnetron filament and the H.V. winding voltage is sent to a voltage doubler circuit.
4. The microwave energy produced by the magnetron is channeled through the waveguide into the cavity feedbox, and then into the cavity where the food is placed to be cooked.
5. Upon completion of the cooking time, the power transformer, oven lamp, etc. are turned off, and the generation of microwave energy is stopped. The oven will revert to the OFF condition.
6. When the door is opened during a cook cycle, monitor switch, door sensing switch, primary interlock switch, and secondary interlock relay are activated with the following results. The circuits to the stirrer motor, the cooling fan motor, the turntable motor, and the high voltage components are de-energized, and the digital read-out displays the time still remaining in the cook cycle when the door was opened.
7. The monitor switch, which is electrically monitoring the operation of the primary interlock switch and door sensing switch, is mechanically associated with the door so that it will function in the following sequence.
   1) When the door opens from a closed position, the secondary interlock relay, door sensing switch and primary interlock switch open their contacts, and then the monitor switch contacts close.
   2) When the door is closed from the open position, the monitor switch contacts open first. Then the contacts of the primary interlock switch and door sensing switch close, and contacts of the relay (RY1) open.

If the primary interlock switch and secondary interlock relay (RY2) fail with the contacts closed when the door is opened, the closing of the monitor switch contacts will form a short circuit through the monitor fuse, primary interlock switch, relay (RY1) and secondary interlock relay (RY2), causing the monitor fuse to blow.

POWER LEVEL P-0 TO P-90 COOKING

When Variable Cooking Power is programmed, the 120 volts A.C. is supplied to the power transformer intermittently through the contacts of relay (RY2) which is operated by the control unit within an interval second time base. Microwave power operation is as follows:

NOTE

The ON/OFF time ratio does not correspond with the percentage of microwave power, because approximately 2 seconds are needed for heating of the magnetron filament.

POWER OUTPUT REDUCTION

If the oven is set for over 40 minutes at 80%, 90% or 100% power level, after the first 40 minutes the power level will auto matically adjust itself to 70% power to avoid overcooking.

VENTILATION METHODS HOT AIR EXHAUST

1. Vertical Venting

For this venting method, hot air rising from the conventional range below is drawn in by the hood fan motor through the grease filters at the right and left sides of the base cover, up through the right and left sides of the oven cavity, then discharged vertically at rear center top of the oven, into the customer's vent system.

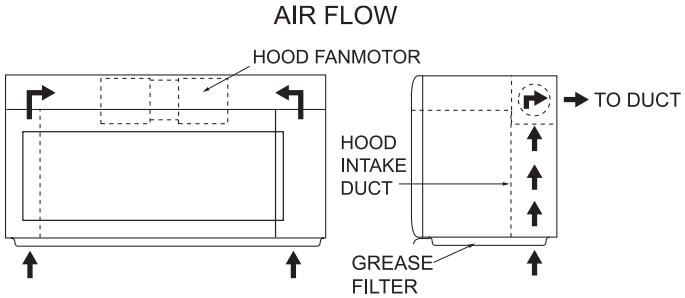

2. Horizontal Venting

TThe air handing is the same as VERTICAL VENTING except that the final air discharge is directed horizontally out from the top rear of the oven into the customer's vent system.

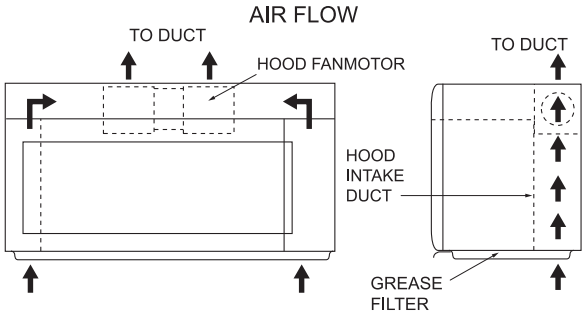

3. Re-circulation (Inside venting)

The air handing is the same as VERTICAL VENTING except that the final air discharge is directed horizontally through the upper front of the oven into the kitchen. In this case, the charcoal filter must be used which have already been installed in the oven.

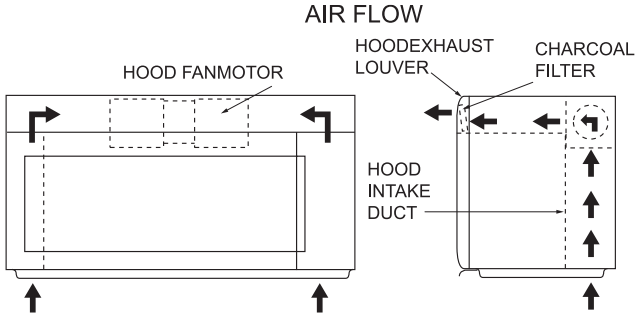

SENSOR COOKING CONDITION

Using the SENSOR function, food is cooked without figuring time, power level or quantity. When the oven senses enough steam from the food, it relays the information to its microproces sor which will calculate the remaining cooking time and power level needed for best results. When the food is cooked, water vapor is developed. the sensor "senses" the vapor and its resist ance increase gradually. When the resistance reaches the value set according to the menu, supplementary cooking is started. The time of supplementary cooking is determined by experiment with each food category and inputted into the LSI. An example of how sensor works: (Potatoes)

1. Potatoes at room temperature. Vapor is emitted very slowly.

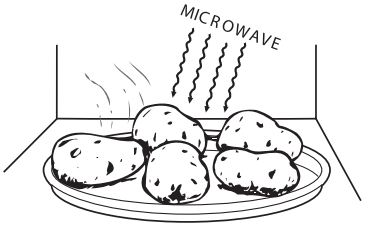

2. Heat Potatoes. Moisture and humidity is emitted very rapidly. You can smell the aroma as it cooks.

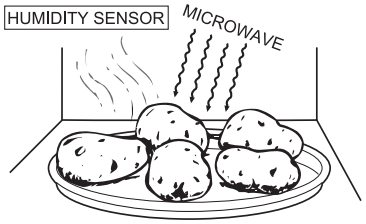

Cooking Sequence.

1. Operate the oven in sensor cooking mode by referring to the operation manual.

NOTE

The oven should not be operated on Sensor Cooking immediately after plugging in the unit. Wait two minutes before cooking on Sensor Cooking.

2. The coil of shut-off relays (RY1 and RY3) are energized, the oven lamp, turntable motor and cooling fan motor are turned on, but the power transformer is not turned on.
3. After about 32 seconds, the relay (RY2) is energized. The power transformer is turned on, microwave energy is produced and first stage is started.

   The 32 seconds is the cooling time required to remove any vapor from the oven cavity and sensor.

NOTE

During this first stage, do not open the door or touch Clear Off pad.

4. When the sensor detects the vapor emitted from the food, the display switches over to the remaining cooking time and the timer counts down to zero. At this time, the door may be opened to stir food, turn it or season, etc.
5. When the timer reaches zero, an audible signal sounds. The shutoff relay (RY1 and RY3) and relay (RY2) are generalized and the power transformer, oven lamp, etc. are turned off.
6. Opening the door or touching the STOP CLEAR pad, the time of day will reappear on the display and the oven will revert to an OFF condition.

SCHEMATIC

NOTE: CONDITION OF OVEN

1. DOOR CLOSED.
2. CLOCK APPEARS ON DISPLAY

NOTE: "★" indicates components with potential above 250V

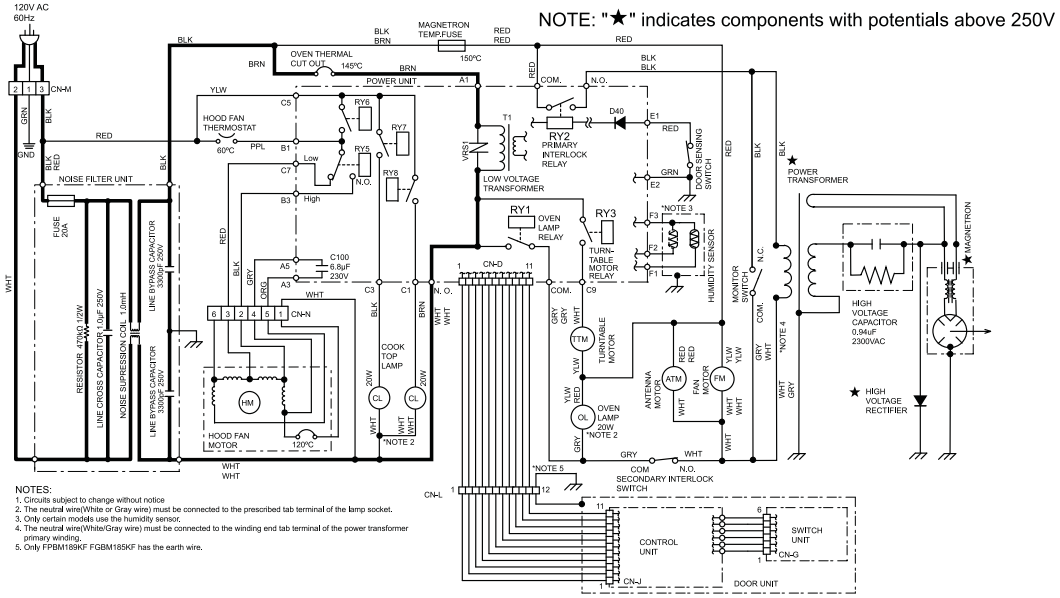

Figure 2-1. Oven Off Condition

SCHEMATIC

NOTE: CONDITION OF OVEN

1. DOOR OPENED.
2. COOKING TIME PROGRAMMED.
3. VARIABLE COOKING CONTROL "P-HI".
4. START PAD TOUCHED.

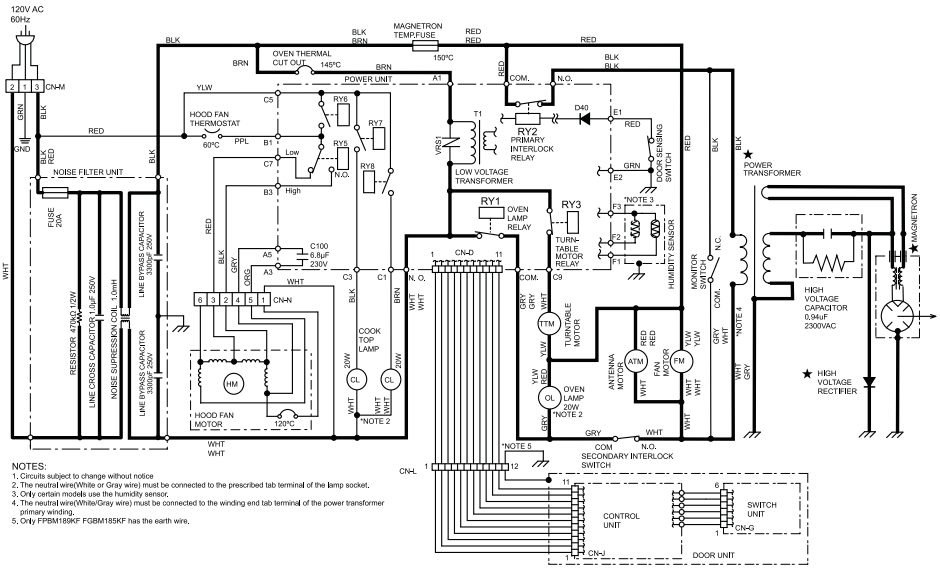

Figure 2-2. Oven ON (Cooking) Condition

Component Description and Functions

DOOR OPEN MECHANISM

The door is opened by pulling the door handle, refer to the Figure 2-3.

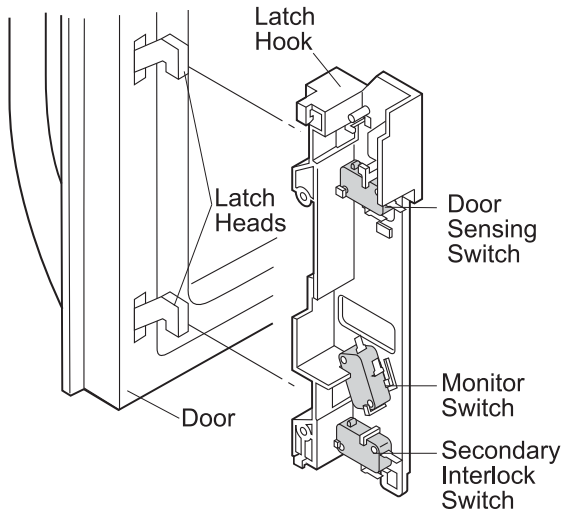

Figure 2-3. Door Open Mechanism

DOOR SENSING SWITCH, SECONDARY INTERLOCK SWITCH

The secondary interlock switch is mounted in the lower position of the latch hook, the door sensing switch in the primary interlock system is mounted in the upper position of the latch hook is mounted on upper position of the latch hook. They are activated by the latch heads on the door. When the door is opened, the switches interrupt the circuit to all components. A cook cycle cannot take place until the door is firmly closed thereby activating both interlock switches. The primary interlock system consists of the door sensing switch and primary interlock relay located on the control circuit board.

MONITOR SWITCH

The monitor switch is activated (the contacts opened) by the latch head on the door while the door is closed. The switch is in tended to render the oven inoperative, by means of blowing the monitor fuse, when the contacts of the primary interlock relay (RY2) and secondary interlock switch fail to open when the door is opened.

Functions:

1. When the door is opened, the monitor switch contact close (to the ON condition) due to their being normally closed. At this time the primary interlock relay (RY2), secondary interlock switch are in the OFF condition (contacts open) due to their being normally open contact switches. And the contacts of relay (RY1) are in the ON condition (contacts close).
2. As the door goes to a closed position, the monitor switch contacts are first opened and then the door sensing switch and the secondary interlock switch contacts close. (On opening the door, each of these switches operate inversely.)
3. If the door is opened, and the primary interlock relay (RY2) and secondary interlock switch contacts fail to open, the monitor fuse blows simultaneously with closing of the monitor switch contacts.

CAUTION

Before replacing a blown monitor fuse test the door sensing switch, primary Interlock relay (ry2), relay (ry1), secondary interlock switch and monitor switch for proper operation. (Refer to chapter “test procedure”).

NOTE

Monitor fuse and monitor switch are replaced as an assembly.

THERMAL CUT-OUT (CAVITY)

This thermal cut-out is located on the top of the oven cavity. It is designed to prevent damage to the oven unit if the food in the oven catches fire due to overheating produced by improper setting of cooking time or failure of control unit. Under normal operation, the thermal cut-out remains closed. However, the thermal cut-out will open at 293°F (145°C) causing the oven to shut down.

TURNTABLE MOTOR

The turntable motor rotates the turntable located on the bottom of the oven cavity, so that the foods on the turntable cook evenly during cooking. Turntable will turn in either direction. The turnta ble motor can be turned off by touching TURNTABLE ON/OFF pad.

COOLING FAN MOTOR

The cooling fan motor drives a blade which draws external cool air. This cool air is directed through the air vanes surrounding the magnetron and cools the magnetron. This air is channelled through the oven cavity to remove steam and vapors given off from the heating foods. It is then exhausted through the exhausting air vents at the oven cavity.

HOOD FAN MOTOR

The hood fan motor is a two-speed, single-phase, double pole induction type, requiring a hood fan capacitor. It is located outside the upper rear part of the oven cavity, is to remove, from around the oven, hot air rising from the conventional electric or gas range over which it is installed. This air is then expelled either vertically or horizontally through the customer supplied duct system, or discharged back into the kitchen. The automatically operation is medium speed. The manual operation is a three speed (Low/ High).

THERMOSTAT (60°C ON)

This thermostat is located on the right base plate. It is designed to automatically turn on the hood fan motor whenever the hot air rising from the conventional range below causes the temperature at the thermostat to rise to 140°F (60°C) or higher, thus removing this hot air from around microwave oven. When the temperature around the thermostat drops to 113°F (45°C) or lower, the thermostat shuts off the hood fan motor.

ANTENNA MOTOR

The motor drives the stirrer fan to stir the microwave radiation from the waveguide.

COOK TOP LAMP

The cook top lamp is mounted at the lamp mounting angle on the base cover. Touch the Light pad once for high, twice for low and four times to turn off the light.

Troubleshooting Guide

Never touch any part in the circuit with your hand or an uninsulated tool while the power supply is connected.

When troubleshooting the microwave oven, it is helpful to follow the Sequence of Operation in performing the checks. Many of the possible causes of trouble will require that a specific test be performed. These tests are given a procedure letter which will be found in the “Test Procedure “section.

CAUTION

If the oven becomes inoperative because of a blown monitor fuse, check monitor switch, relay (RY1) secondary interlock relay (RY2), stop switch (door sensing switch) and primary interlock switch before replacing the monitor fuse. If the monitor fuse is replaced, the monitor switch must also be replaced.

WARNING

Whenever troubleshooting is performed with the power supply cord disconnected. It may in, some cases, be necessary to connect the power supply cord after the outer case has been removed, in this event:

1. **Disconnect the power supply cord, and then remove outer case.**
2. **Open the door and block it open.**
3. **To discharge high voltage capacitor, wait for 60 seconds and then short-circuit the connection of the high-voltage capacitor (that is the connecting lead of the high-voltage rectifier) against the chassis with the use of an insulated screwdriver.**
4. **Disconnect the leads to the primary of the power transformer.**
5. **Ensure that the leads remain isolated from other components and oven chassis by using insulation tape.**

WARNING

When the testing is completed:

1. **Disconnect the power supply cord, and then remove outer case.**
2. **Open the door and block it open.**
3. **To discharge high voltage capacitor, wait for 60 seconds and then short-circuit the connection of the high-voltage capacitor (that is the connecting lead of the high-voltage rectifier) against the chassis with the use of an insulated screwdriver.**
4. **Reconnect the leads to the primary of the power transformer.**
5. **Reinstall the outer case (cabinet).**
6. **Reconnect the power supply cord after the outer case is installed.**
7. **Run the oven and check all functions.**

Microwave ovens should not be run empty. To test for the presence of microwave energy within a cavity, place a cup of cold water on the oven turntable, close the door and set the power to HIGH and then set the microwave timer for two (2) minutes. When the two minutes has elapsed (timer at zero) carefully check that the water is now hot. If the water remains cold carry out Before Servicing procedure and re-examine the connections to the component being tested.

When all service work is completed and the oven is fully assembled, the microwave power output should be checked and a microwave leakage test should be carried out.

CK = Check / RE = Replace

TEST PROCEDURE		A	B	C	D	E	F	G	H	I	J	K	L	M	N	N	N	N	N	N	O	RE	RE	RE	RE	CK	RE	CK	CK	RE	CK	CK	Q	P
CONDITION	POSSIBLE CASE AND DEFECTIVE PARTS / PROBLEM	MAGNETRON	POWER TRANSFORMER	H.V. RECTIFIER	PRIMARY INTERLOCK SYSTEM	TEMPERATURE FUSE OR THERMAL CUT-OUT	SECONDARY INTERLOCK SWITCH	HIGH VOLTAGE CAPACITOR	MONITOR SWITCH	MONITOR FUSE	HOOD THERMOSTAT 60°C ON	HOOD FAN MOTOR	CONTROL UNIT	KEY UNIT (DOOR)	RELAY (RY-1)	RELAY (RY-2)	RELAY (RY-3)	RELAY (RY-6)	RELAY (RY-5)	RELAY (RY-7, RY-8)	FUSE ON P.W.B.	OVEN LAMP OR SOCKET	FAN MOTOR	TURNTABLE MOTOR	ANTENNA MOTOR	TURNTABLE OFF CONDITION	COOK TOP LAMP OR SOCKET	HOOD MOTOR CAPACITOR ON PWB	OPENED OR SHORTED WIRING	SHORTED IN POWER CORD	NO POWER AT OUTLET	LOW VOLTAGE	NOISE FILTER	HUMIDITY SENSOR
OFF CONDITION	Home fuse blows when power cord is plugged into wall receptacle.																														●			
	Monitor fuse blows when power cord is plugged into wall receptacle.							●	●						●	●													●				●	
	Display does not illuminate when power cord is first plugged into wall receptacle.					●				●			●								●								●		●		●	
	Display does not operate properly when STOP/CLEAR key is touched. (The time of day should appear on the display with beep sound during normal condition.)							●					●	●															●					
	Oven lamp does not light with door is opened.							●					●		●							●							●				●	
	Hood fan motor operates when power cord is first plugged into wall receptacle.										●																							
	Temperature of oven base seems more than 140°F (60°C) because of operation of the range below. But hood fan motor does not turn on automatically. (Normally, food fan motor should be operating at mid speed.)										●	●							●									●	●					
IDLE CONDITION	Cook top lamp does not turn on when LIGHT pad is pressed.												●	●						●							●		●					
	Hood fan motor does not rotate at all with touched VENT pad.											●	●	●				●	●									●	●					
	Speed of the hood fan motor does not change when the VENT pad is touched for this function.											●	●						●										●					
MICROWAVE COOKING CONDITION	Oven lamp does not light in cook cycle. (But it does light when door is opened.)												●																					
	Fan motor does not operate. (Oven lamp and turntable motor operate.)																						●						●					
	Turntable motor does not operate (Oven lamp lights and fan motor operate.)												●	●			●							●		●			●					
	Oven does not go into cook cycle when START pad is touched						●	●					●	●															●					
	Oven seems to be operating but little or no heat is produced in oven load. (Food incompletely cooked or not cooked at all at end of cook cycle.)	●	●	●	●								●			●													●			●		
	Oven goes into a cook cycle but extremely uneven heating is produced in oven load (food).																							●	●	●			●					
	Variable cooking does not operate properly except Cooking Power 100% mode.												●	●		●																		
	Function of AUTO DEFROST does not operate properly.												●																					
	Antenna motor does not operate. (Other parts operate.)																								●				●					
	Oven goes into AUTO DEFROST but food is not defrosted well.												●																					
SENSOR COOKING CONDITION	The oven stops and "ERROR" is displayed or does not end during Sensor Cooking condition. (Oven does not shut off after a cup of water is boiling by Sensor Cooking.)												●																	●				●
	Oven stops at 32 seconds after starting.												●																	●				●

Test Procedures

Procedure Letter	Component Test
A	**MAGNETRON ASSEMBLY TEST** **WARNING** **High voltages are present during the cook cycle, so extreme caution should be observed. Discharge the high voltage capacitor before touching any oven components or wiring.** 1. Disconnect the power supply cord, and then remove outer case. 2. Open the door and block it open. 3. Discharge high voltage capacitor. 4. To test for an open filament, isolate the magnetron from the high voltage circuit. A continuity check across the magnetron filament leads should indicate less than 1 ohm. 5. To test for a shorted magnetron, connect the ohmmeter leads between the magnetron filament leads and chassis ground. This test should indicate an infinite resistance. If there is little or no resistance the magnetron is grounded and must be replaced. 6. Reconnect all leads removed from components during testing. 7. Reinstall the outer case (cabinet). 8. Reconnect the power supply cord after the outer case is installed. 9. Run the oven and check all functions. MICROWAVE OUTPUT POWER The following test procedure should be carried out with the microwave oven in a fully assembled condition (outer case fitted). Power output of the magnetron can be measured by performing a water temperature rise test. This test should only be used if above tests do not indicate a faulty magnetron and there is no defect in the following components or wiring: silicon rectifier, high voltage capacitor and power transformer. This test will require a 16 ounce (453cc) measuring cup and an accurate mercury thermometer or thermocouple type temperature tester. For accurate results, the following procedure must be followed carefully: 1. Fill the measuring cup with 16 oz. (453cc) of tap water and measure the temperature of the water with a thermometer or thermocouple temperature tester. Stir the thermometer or thermocouple through the water until the temperature stabilizes. Record the temperature of the water. 2. Place the cup of water in the oven. Operate oven at 100% POWER selecting more than 60 seconds cook time. Allow the water to heat for 60 seconds, measuring with a stop watch, second hand of a watch or the digital read-out countdown. 3. Remove the cup from the oven and again measure the temperature, making sure to stir the thermometer or thermocouple through the water until the maximum temperature is recorded. 4. Subtract the cold water temperature from the hot water temperature. The normal result should be 29.2 to 54.2°F(16.2 to 30.1°C) rise in temperature. If the water temperatures are accurately measured and tested for the required time period the test results will indicate if the magnetron tube has low power output (low rise in water temperature) which would extend cooking time or high power output (high rise in water temperature) which would reduce cooking time. Because cooking time can be adjusted to compensate for power output, the magnetron tube assembly should be replaced only if the water temperature rise test indicates a power output well beyond the normal limits. The test is only accurate if the power supply line voltage is 120 volts and the oven cavity is clean.

Procedure Letter	Component Test
B	**POWER TRANSFORMER TEST** **WARNING** **Do not touch the components of the power transformer while power transformer is energized. It is dangerous because this has high voltage components. (High voltages are present at the high voltage terminal, so do not attempt to measure the filament and high voltage.)** 1. Disconnect the power supply cord, and then remove outer case. 2. Open the door and block it open. 3. Discharge high voltage capacitor. 4. Disconnect the primary input terminals and measure the resistance of the transformer with an ohmmeter. Check for continuity of the coils with an ohmmeter. On the R x 1 scale, the resistance of the primary coil should be less than 1 ohm and the resistance of the high voltage coil should be approximately 85 ohms; the resistance of the filament coil should be less than 1 ohm. 5. Reconnect all leads removed from components during testing. 6. Reinstall the outer case (cabinet). 7. Reconnect the power supply cord after the outer case is installed. 8. Run the oven and check all functions.
C	**HIGH VOLTAGE RECTIFIER TEST** 1 Disconnect the power supply cord, and then remove outer case. 2. Open the door and block it open. 3. Discharge high voltage capacitor. 4. Isolate the rectifier from the circuit. Using the highest ohm scale of the meter, read the resistance across the terminals and observe, reverse the leads to the rectifier terminals and observe meter reading. If a short is indicated in both directions, or if an infinite resistance is read in both directions, the rectifier is probably defective and should be replaced. 5. Reconnect all leads removed from components during testing. 6. Reinstall the outer case (cabinet). 7. Reconnect the power supply cord after the outer case is installed. 8. Run the oven and check all functions. NOTE Be sure to use an ohmmeter that will supply a forward bias voltage of more than 6.3 volts.

Procedure Letter	Component Test
D	**HIGH VOLTAGE CAPACITOR TEST** 1. Disconnect the power supply cord, and then remove outer case. 2. Open the door and block it open. 3. Discharge high voltage capacitor. 4. If the capacitor is open, no high voltage will be available to the magnetron. Disconnect input leads and check for short or open between the terminals using an ohmmeter. Checking with a high ohm scale, if the high voltage capacitor is normal, the meter will indicate continuity for a short time and should indicate an open circuit once the capacitor is charged. If the above is not the case, check the capacitor with an ohmmeter to see if it is shorted between either of the terminals and case. If it is shorted, replace the capacitor. 5. Reconnect all leads removed from components during testing. 6. Reinstall the outer case (cabinet). 7. Reconnect the power supply cord after the outer case is installed. 8. Run the oven and check all functions.
E	**THERMAL CUT-OUT AND TEMPERATURE FUSE TEST** CAVITY THERMAL CUT-OUT TEST 1. Disconnect the power supply cord, and then remove outer case. 2. Open the door and block it open. 3. Discharge high voltage capacitor. 4. A continuity check across the thermal cut-out terminals should indicate a closed circuit unless the temperature of the thermal cutout reaches approximately 293°F(145°C). An open thermal cut-out indicates overheating of the oven, exchange the oven thermal cut-out and check inside of oven cavity and for improper setting of cooking time or operation of control unit. Check for restricted air flow through the vent holes of the oven cavity, especially the cooling fan and air guide. 5. Reconnect all leads removed from components during testing. 6. Reinstall the outer case (cabinet). 7. Reconnect the power supply cord after the outer case is installed. 8. Run the oven and check all functions. MAGNETRON TEMPERATURE FUSE TEST 1. Disconnect the power supply cord, and then remove outer case. 2. Open the door and block it open. 3. Discharge high voltage capacitor. 4. A continuity check across the magnetron temperature fuse terminals should indicate a closed circuit unless the temperature of the magnetron temperature fuse reaches approximately 302°F(150°C). An open magnetron temperature fuse indicates overheating of the magnetron. Check for restricted air flow to the magnetron, especially the cooling fan air guide. 5. Reconnect all leads removed from components during testing. 6. Reinstall the outer case (cabinet). 7. Reconnect the power supply cord after the outer case is installed. 8. Run the oven and check all functions. **CAUTION** **If the temperature fuse indicates an open circuit at room temperature, replace temperature fuse.**

Procedure Letter	Component Test
F	**SECONDARY INTERLOCK SWITCH TEST** 1. Disconnect the power supply cord, and then remove outer case. 2. Open the door and block it open. 3. Discharge high voltage capacitor. 4. Isolate the switch and connect the ohmmeter to the common (COM.) and normally open (NO) terminal of the switch. The meter should indicate an open circuit with the door open and a closed circuit with the door closed. If improper operation is indicated, replace the secondary interlock switch. 5. Reconnect all leads removed from components during testing. 6. Reinstall the outer case (cabinet). 7. Reconnect the power supply cord after the outer case is installed. 8. Run the oven and check all functions.
G	**PRIMARY INTERLOCK SYSTEM TEST** DOOR SENSING SWITCH 1. Disconnect the power supply cord, and then remove outer case. 2. Open the door and block it open. 3. Discharge high voltage capacitor. 4. Isolate the switch and connect the ohmmeter to the common (COM.) and normally open (NO) terminal of the switch. The meter should indicate an open circuit with the door open and a closed circuit with the door closed. If improper operation is indicated, replace the door sensing switch. 5. Reconnect all leads removed from components during testing. 6. Reinstall the outer case (cabinet). 7. Reconnect the power supply cord after the outer case is installed. 8. Run the oven and check all functions. **CAUTION** **If the door sensing switch contacts fail in the open position and the door is closed, the cooling fan motor, stirrer motor and oven light will be activated by RY1.** PRIMARY INTERLOCK RELAY (RY2) 1. Disconnect the power supply cord, and then remove outer case. 2. Open the door and block it open. 3. Discharge high voltage capacitor. 4. Disconnect two (2) wire leads from the male tab terminals of the Primary Interlock Relay. Check the state of the relay contacts using a ohmmeter. The relay contacts should be open. If the relay contacts are closed, replace the circuit board entirely or the relay itself. 5. Reconnect all leads removed from components during testing. 6. Reinstall the outer case (cabinet). 7. Reconnect the power supply cord after the outer case is installed. 8. Run the oven and check all functions.

Procedure Letter	Component Test
H	**MONITOR SWITCH TEST** 1. Disconnect the power supply cord, and then remove outer case. 2. Open the door and block it open. 3. Discharge high voltage capacitor. (See Warnings and Instructions on page 3-1) 4. Before performing this test, make sure that the secondary interlock switch and the primary interlock relay are operating properly, according to the above Switch Test Procedure. Disconnect the wire lead from the monitor switch (COM) terminal. Check the monitor switch operation by using the ohmmeter as follows. When the door is open, the meter should indicate a closed circuit. When the monitor switch actuator is pushed by a screw driver through the lower latch hole on the front plate of the oven cavity with the door opened (in this condition the plunger of the monitor switch is pushed in), the meter should indicate an open circuit. If improper operation is indicated, the switch may be defective. After testing the monitor switch, reconnect the wire lead to the monitor switch (COM) terminal and check the continuity of the monitor circuit. 5. Reconnect all leads removed from components during testing. 6. Reinstall the outer case (cabinet). 7. Reconnect the power supply cord after the outer case is installed. 8. Run the oven and check all functions. 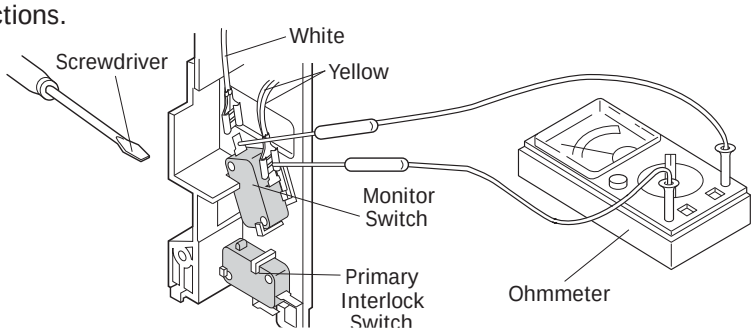
I	**BLOWN MONITOR FUSE TEST** 1. Disconnect the power supply cord, and then remove outer case. 2. Open the door and block it open. 3. Discharge high voltage capacitor. 4. If the monitor fuse is blown when the door is opened, check the secondary interlock switch, primary interlock relay (RY2), relay (RY1) and monitor switch according to the “TEST PROCEDURE” for those switches before replacing the blown monitor fuse. **CAUTION** **Before replacing a blown monitor fuse, test the secondary interlock switch, primary interLock relay, door sensing switch and monitor switch for proper operation.** If the monitor fuse is blown by improper switch operation, the monitor fuse and monitor switch must be replaced with “monitor fuse and monitor switch assembly” part number FFS-BA037WRKZ, even if the monitor switch operates normally. The monitor fuse and monitor switch assembly is comprised of a 20 ampere fuse and switch. 5. Reconnect all leads removed from components during testing. 6. Reinstall the outer case (cabinet). 7. Reconnect the power supply cord after the outer case is installed. 8. Run the oven and check all functions.

Procedure Letter	Component Test
J	**HOOD THERMOSTAT TEST** THERMOSTAT (60°C ON) 1. Disconnect the power supply cord, and then remove outer case. 2. Open the door and block it open.3. Discharge high voltage capacitor. 4. A continuity check across the thermal cut-out terminals should indicate an open circuit unless the temperature of the thermal cut-out reaches approximately 140°F(60°C) or more. At that temperature, the contacts will close. The thermal cut-out opens automatically at approximately 113°F(45°C). 5. Reconnect all leads removed from components during testing. 6. Reinstall the outer case (cabinet). 7. Reconnect the power supply cord after the outer case is installed. 8. Run the oven and check all functions.
K	HOOD FAN MOTOR TEST 1. Disconnect the power supply cord, and then remove outer case. 2. Open the door and block it open. 3. Discharge high voltage capacitor. 4. If the motor does not turn, touch the Vent Hi/ Lo/ Off pad once (set hood fan motor power "HIGH") and check voltage between pins "1" and "2" (Blue and Black wires) of the 6 pin connector. If 120 Volts appear and the hood capacitor is good, replace the hood fan assembly. If 120 Volts does not appear, check the motor circuit. The resistance values of motor terminals are as follows: 5. Reconnect all leads removed from components during testing. 6. Reinstall the outer case (cabinet). 7. Reconnect the power supply cord after the outer case is installed. 8. Run the oven and check all functions. 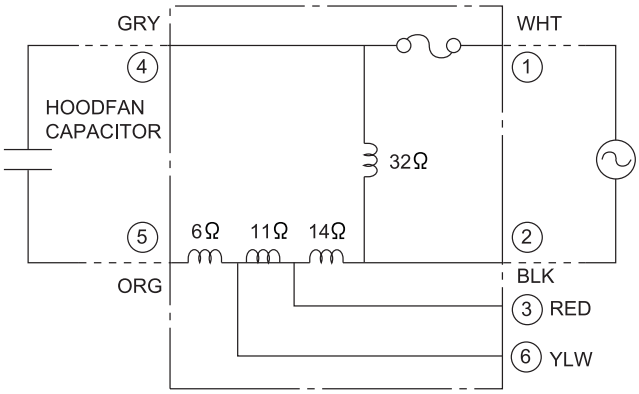 Resistance between; WHT(1) AND GRY(4) = 0Ω (shorted) BLK(2) AND GRY(4) = 32Ω WHT(1) AND BLK(2) = 32Ω BLK(2) AND RED(3) = 14Ω RED(3) AND YLW(6) = 11Ω ORG(5) AND YLW(6) = 6Ω 6-PIN CONNECTOR OF HOOD FAN MOTOR 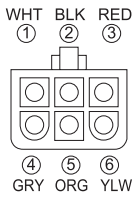

Procedure Letter	Component Test
L	**TOUCH CONTROL PANEL ASSEMBLY TEST** The touch control panel consists of circuits including semiconductors such as LSI, ICs, etc. Therefore, unlike conventional microwave ovens, proper maintenance cannot be performed with only a voltmeter and ohmmeter. In this service manual, the touch control panel assembly is divided into three units, Control Unit (Display unit), Key Unit and Power Unit, and troubleshooting by unit replacement is described according to the symptoms indicated. **Before testing** 1. Disconnect the power supply cord, and then disassemble as per “HOOD LOUVER REMOVAL”, “REMOVAL OF OVEN FROM WALL” and “OUTER CASE REMOVAL”. 2. Open the door and block it open. 3. Discharge high voltage capacitor. 4. Disconnect the leads to the primary of the power transformer. 5. Ensure that these leads remain isolated from other components and oven chassis by using insulation tape. 6. After that procedure, re-connect the power supply cord. **Key Unit** 1. Check Key unit connection before replacement. 2. Reconnect all leads removed from components during testing. 3. Re-install the covers (outer case cabinet and control unit cover). 4. Reconnect the power supply cord after the covers (outer case cabinet and control unit cover) are installed. 5. Run the oven and check all functions. The following symptoms indicate a defective key unit. a) When touching the pads, a certain pad produces no signal at all. b) When touching a number pad, two figures or more are displayed. c) When touching the pads, sometimes a pad produces no signal. If the key unit is defective. 1) Disconnect the power supply cord and then remove outer case. 2) Open the door and block it open. 3) Discharge high voltage capacitor. 4) Remove the control unit cover. 5) Replace the key unit (FPC + key sheet). 6) Reconnect all leads removed from components during testing. 7) Re-install the covers (outer case cabinet and control unit cover). 8) Reconnect the power supply cord after the covers (outer case cabinet and control unit cover) are installed. 9) Run the oven and check all functions.

Procedure Letter	Component Test
L	CONTROL UNIT The following symptoms indicate a defective control unit. Before replacing the control unit, perform the Key unit test (Procedure M) to determine if control unit is faulty. 1. In connection with indicators a) At a certain digit, all or some segments do not light up. b) At a certain digit, brightness is low. c) Only one indicator does not light. d) The corresponding segments of all digits do not light up; or they continue to light up. e) Wrong figure appears. f) A certain group of indicators do not light up. g) The figure of all digits flicker. 2. Other possible problems caused by defective control unit. a) Buzzer does not sound or continues to sound. b) Clock does not operate properly. c) Cooking is not possible. 3. Power Unit or Touch Control Transformer a) Fan motor, stirrer motor, oven lamp or electrical parts do not turn on or do not turn off. b) Digital display on the control unit does not show anything. WHEN TESTING IS COMPLETED 1. Disconnect the power supply cord, and then disassemble as per “HOOD LOUVER REMOVAL”, “REMOVAL OF OVEN FROM WALL” and “OUTER CASE REMOVAL”. 2. Open the door and block it open. 3. Discharge high voltage capacitor. 4. Reconnect all leads removed from components during testing. 5. Re-install the covers (outer case cabinet and control unit cover). 6. Reconnect the power supply cord after the covers are installed. 7. Run the oven and check all functions.

Procedure Letter	Component Test
M	**KEY UNIT (FPC) TEST**

1. Disconnect the power supply cord, and then disassemble as per “HOOD LOUVER REMOVAL”, “REMOVAL OF OVEN FROM WALL” and “OUTER CASE REMOVAL”.
2. Open the door and block it open.
3. Discharge high voltage capacitor.
4. Disconnect the leads to the primary of the power transformer.
5. Remove the control unit cover.
6. Ensure that these leads remain isolated from other components and oven chassis by using insulation tape.
7. After that procedure, re-connect the power supply cord.
8. If the display fails to clear when the Clear Off pad is depressed, first verify the flat ribbon cable is making good contact, verify that the door sensing switch (stop switch) operates properly; that is the contacts are closed when the door is closed and open when the door is open. If the door sensing switch (stop switch) is good, disconnect the flat ribbon cable that connects the key unit to the control unit and make sure the door sensing switch is closed (either close the door or short the door sensing switch connector). Use the Key unit matrix indicated on the control panel schematic and place a jumper wire between the pins that correspond to the Clear Off pad making momentary contact. If the control unit responds by clearing with a beep the key unit (FPC) is faulty and must be replaced. If the control unit does not respond, it is faulty and must be replaced. If a specific pad does not respond, the above method may be used (after clearing the control unit) to determine if the control unit or key pad is at fault.
9. Disconnect the power supply cord and then remove outer case.
10. Open the door and block it open.
11. Discharge high voltage capacitor.
12. Remove the control unit cover.
13. Reconnect all leads removed from components during testing.
14. Re-install the covers (outer case cabinet and control unit cover).
15. Reconnect the power supply cord after the covers (outer case cabinet and control unit cover) are installed.
16. Run the oven and check all functions.

G13	G12	G11	G10	G9	G8	G7	G6	
2	1	timer on-off	keep warm	chicken nuggets	auto cook			G5
3	user pref	melt soften	auto defrost	sensor reheat	sensor cook	6	9	G4
power level	popcorn	turn table on/off	auto reheat	snacks menu	veggies	add 30 sec	0	G3
	baked potato						START enter	G2
	4	7	8			5	STOP clear	G1

Procedure Letter	Component Test
N	**RELAY TEST** 1. Disconnect the power supply cord, and then remove outer case. 2. Open the door and block it open. 3. Discharge high voltage capacitor. (See Warnings and Instructions on page 3-1) 4. Disconnect the leads to the primary of the power transformer. 5. Ensure that these leads remain isolated from other components and oven chassis by using insulation tape. 6. After that procedure, re-connect the power supply cord. 7. Remove the outer case and check voltage between Pin No. 1 of the 3 pin connector (A) and the oven side terminal of the relay RY1 on the control unit with an A.C. voltmeter. The meter should indicate 120 volts, if not check oven circuit. **RY1 and RY2 Relay Test** These relays are operated by D.C. voltage Check voltage at the relay coil with a D.C. voltmeter during the microwave cooking operation. DC. voltage indicated..... Defective relay. DC. voltage not indicated ..... Check diode which is connected to the relay coil. If diode is good, control unit is defective.

RELAY SYMBOL	OPERATIONAL VOLTAGE	CONNECTED COMPONENTS
RY1	Approx. 24.0V D.C.	Oven lamp / Fan motor / Antenna motor
RY2	Approx. 24.0V D.C.	Power transformer
RY5	Approx. 24.0V D.C.	Hood motor (HIGH/LOW selection)
RY6	Approx. 24.0V D.C.	Hood motor
RY7, RY8	Approx. 24.0V D.C.	Cook top lamp (HIGH/LOW selection)
RY3	Approx. 24.0V D.C.	Turntable motor

8. If any abnormal condition is detected, replace the control unit.
9. Disconnect the power supply cord and then remove outer case.
10. Open the door and block it open.
11. Discharge high voltage capacitor. (See Warnings and Instructions on page 3-1)
12. Reconnect all leads removed from components during testing.
13. Re-install the outer case (cabinet).
14. Reconnect the power supply cord after the outer case is installed.
15. Run the oven and check all functions.

Procedure Letter	Component Test
O	**PROCEDURES TO BE TAKEN WHEN THE FUSE ON THE PRINTED WIRING BOARD (PWB) IS OPEN.** To protect the electronic circuits, this model is provided with a fuse added to the primary on the PWB. **Fuse check and repairs.** 1. Disconnect the power supply cord. 2. Remove the covers. 3. Open the door and block it open. 4. Discharge high voltage capacitor. 5. If the Fuse is blown, replace power unit. 6. Make a visual inspection of the varistor. Check for burned damage. If the varistor has been burned, replace the power unit. 7. Examine the touch control transformer with a tester for the presence of layer short-circuit (check the primary coil resistance which is approximately 110Ω±10%). If any abnormal condition is detected, replace the power unit. 8. Reconnect all leads removed from components during testing. 9. Re-install the covers. 10. Reconnect the power supply cord after the covers are installed. 11. Run the oven and check all functions. **Follow the troubleshooting guide given below, if indicator does not light up after above check and repairs are finished.** 1. Disconnect the power supply cord. 2. Remove the covers. 3. Open the door and block it open. 4. Discharge high voltage capacitor. 5. Disconnect the leads to the primary of the power transformer. 6. Ensure that these leads remain isolated from other components and oven chassis by using insulation tape. 7. After that procedure, re-connect the power supply cord. 8. Follow the troubleshooting guide given below for repair.

STEPS	OCCURRENCE	CAUSE OR CORRECTION
1	The rated AC voltage is not present between Pin No. 1 of the 3-pin connector (A) and the oven side terminal of the relay RY1	Check supply voltage and oven power cord.
2	The rated AC voltage is present at primary side of touch control transformer.	Touch control transformer or secondary circuit defective. Check and replace the power unit.

9. Disconnect the power supply cord, and then remove the covers.
10. Open the door and block it open.
11. Discharge high voltage capacitor.
12. Reconnect all leads removed from components during testing.
13. Re-install the covers.
14. Reconnect the power supply cord after the covers are installed.
15. Run the oven and check all functions.

Procedure Letter	Component Test
P	**HUMIDITY SENSOR TEST** **Checking the initial sensor cooking condition:** **WARNING** **The oven should be fully assembled before following procedure.** 1. The oven should be plugged in at least two minutes before sensor cooking. 2. Room temperature should not exceed 35°C. 3. The unit should not be installed in any area where heat and steam are generated. The unit should not be installed, for example, next to a conventional surface unit. Refer to the "INSTALLATION Instructions". 4. Exhaust vents are provided on the back of the unit for proper cooling and air flow in the cavity. To permit adequate ventilation, be sure to install so as not to block these vents. There should be some space for air circulation. 5. Be sure the exterior of the cooking container and the interior of the oven are dry. Wipe off any moisture with a dry cloth or paper towel. 6. The Sensor works with food at normal storage temperature. For example, chicken pieces would be at refrigerator temperature and canned soup at room temperature. 7. Avoid using aerosol sprays or cleaning solvents near the oven while using Sensor settings. The sensor will detect the vapor given of by the spray and turn off before food is properly cooked. 8. After the oven is started on sensor cooking condition, if the sensor has not detected the vapor of the food, ERROR will appear and the oven will shut off. **Water load cooking test:** **WARNING** **The oven should be fully assembled before following procedure.** Make sure the oven has been plugged in at least two minutes before checking sensor cook operation. The cabinet should be installed and screws tightened. 1. Fill approximately 200 milliliters of tap water in a 1000 milliliter measuring cup. 2. Place the container on the center of tray in the oven cavity. 3. Close the door. 4. Touch the Timer On-Off pad once, the POWER LEVEL pad twice and the START pad once. And touch the number pad 1 once and the number pad 2 once. Now, the oven is in the sensor cooking condition, and "AH10" and "COOK" will appear in the display. 5. The oven will operate for the first 32 seconds, without generating microwave energy. **NOTE** **ERROR will appear if the door is opened or STOP/CLEAR pad is touched during first stage of sensor cooking.** 6. After approximately 32 seconds, microwave energy is produced. If ERROR is displayed or the oven does not turn off, replace the humidity sensor or check the control unit, refer to explanation below.

Procedure Letter	Component Test
P	**TESTING METHOD FOR HUMIDITY SENSOR AND/OR CONTROL UNIT** To determine if sensor is defective, the simplest method is to replace it with a new sensor. 1. Disconnect the power supply cord, and then remove outer case. 2. Open the door and block it open. 3. Discharge high voltage capacitor. 4. Remove the humidity sensor. 5. Install the new humidity sensor. 6. Reconnect all leads removed from components during testing. 7. Re-install the outer case (cabinet). 8. Reconnect the power supply cord after the outer case is installed. 9. Reconnect the oven to the power supply and check the sensor cook operation as follows: a. Fill approximately 200 milliliters of tap water in a 1000 milliliter measuring cup. b. Place the container on the center of tray in the oven cavity. c. Close the door. d. Touch the Timer On-Off pad once, the POWER LEVEL pad twice and the START pad once. And touch the number pad 1 once and the number pad 2 once. e. The control panel is in automatic Sensor operation. f. The oven turns off automatically, and the time for detecting moisture will be displayed. If new sensor dose not operate properly, the problem is with the control unit, and refer to explanation below. **CHECKING CONTROL UNIT** 1. Disconnect the power supply cord, and then remove outer case. 2. Open the door and block it open. 3. Discharge high voltage capacitor. 4. Disconnect the sensor connector that is mounted to control panel. 5. Then connect the dummy resistor circuit (see below) to the sensor connector of control panel. R1,R2: 22Ω ±1% 1/2W R3: 4.3kΩ ±5% 1/4W R4: 1MΩ ±% 1/4W 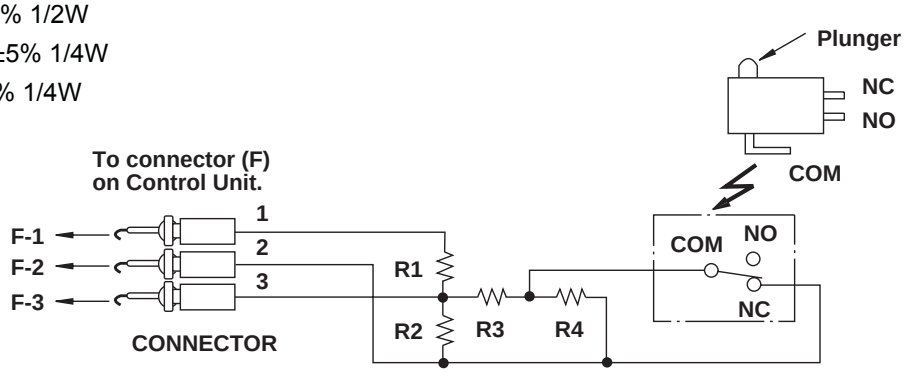 **Sensor Dummy Resistor Circuit**

Procedure Letter	Component Test
	6. Disconnect the leads to the primary of the power transformer. 7. Ensure that these leads remain isolated from other components and oven chassis by using insulation tape. 8. After that procedure, re-connect the power supply cord. 9. Check the sensor cook operation proceed as follows: a) Close the door. Touch the Timer On-Off pad once, the POWER LEVEL pad twice and the START pad once. And touch the number pads 1 once and the number pad 2 once. b) The control panel is in the sensor cooking operation. c) After approximately 41 seconds, push plunger of select switch for more than 3 seconds. This condition is same as judgement by humidity sensor. d) After approximately 3 seconds, the display shows “X X. X X” which is the time for detecting moisture. If the above is not the case, the control unit is probably defective. If the above is proper, the humidity sensor is probably defective. 10. Disconnect the power supply cord, and then remove outer case. 11. Open the door and block it open. 12. Discharge high voltage capacitor. 13. Disconnect the dummy resistor circuit from the sensor connector of control panel. 14. Carry out necessary repair. 15. Reconnect all leads removed from components during testing and repairing. 16. Re-install the outer case (cabinet). 17. Reconnect the power supply cord after the outer case is installed. Run the oven and check all functions. 18. Carry out “Water load cooking test” again and ensure that the oven works properly.
Q	**NOISE FILTER TEST** 1. Disconnect the power supply cord, and then remove outer case. 2. Open the door and block it open. 3. Discharge high voltage capacitor. 4. Disconnect the leads to the primary of the power transformer. 5. Using an ohmmeter, check between the terminals as described in the following table. 6. Reconnect all leads removed from components during testing. 7. Reinstall the outer case (cabinet). 8. Reconnect the power supply cord after the outer case is installed. 9. Run the oven and check all functions. MEASURING POINT / INDICATION OF OHMMETER Between N and H / Approx. 470 KW Between terminal N and LOAD / Short circuit. Between terminal L and LOAD / Short circuit.

Outline Of Touch Control Panel

The touch control section consists of the following units.
(1) Key unit
(2) Control Unit (Display unit)
(3) Power unit

The principal functions of these units and the signals communicated among them are explained below.

Key unit

The key unit is composed of a matrix, signals generated in the LSI are sent to the key unit. When a key pad is touched, a signal is completed through the key unit and passed back to the LSI to perform the function that was requested.

Control Unit (Display unit) and Power Unit

Control unit consists of LSI, IC, reset circuit, indicator circuit, power source circuit, relay circuit, buzzer circuit, synchronizing signal circuit, key unit circuit and humidity sensor circuit.

1) IC1 (LSI)
   This is a microcomputer, responsible for controlling the entire control unit.
2) IC2
   This is the IC to amplify the signal from the humidity sensor.
3) IC3
   This is the IC to drive the Fluorescent Display (VFD).
4) Reset Circuit
   This circuit generates a signal which resets the LSI (IC1) to the initial state when power is supplied.
5) Indicator Circuit
   Indicator element is Fluorescent Display. Basically, a Fluorescent Display is triode having a cathode, a grid and an anode. Usually, the cathode of a Fluorescent Display is directly heated and the filament serves as cathode. The Fluorescent Display has 8-digits, 16-segments are used for displaying figures.
6) Power Source Circuit
   This circuit generates voltages necessary in the control unit from the AC line voltage. In addition, the synchronizing signal is available in order to compose a basic standard time in the clock circuit.

Symbol	Voltage	Application
VC	- 5V	LSI(IC1)

7) Relay Circuit
   A circuit to drive the magnetron, fan motor, antenna motor, hood motor and light the oven lamp and cook top lamp.
8) Buzzer Circuit
   The buzzer is responsive to signals from the LSI to emit audible sounds (key touch sound and completion sound).
9) Synchronizing Signal Circuit
   The power source synchronizing signal is available in order to compose a basic standard time in the clock circuit. It accompanies a very small error because it works on commercial frequency.
10) Door Sensing Switch
    A switch to “tell” the LSI if the door is open or closed.
11) Humidity Sensor Circuit
    This circuit detects moisture of the cooking food to allow its automatic cooking.

HUMIDITY SENSOR CIRCUIT

Structure of Humidity Sensor

The humidity sensor includes two thermistors as shown in the illustration. One thermistor is housed in the closed vessel filled with dry air while another in the open vessel. Each sensor is provided with the protective cover made of metal mesh to be protected from the external airflow.

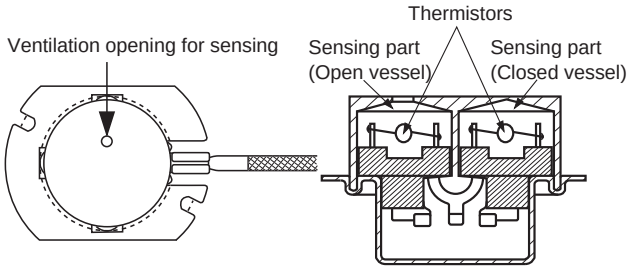

Operational Principle of Humidity Sensor

The figure below shows the basic structure of a humidity sensor. A bridge circuit is formed by two thermistors and two resistors (R1 and R2). The output of the bridge circuit is to be amplified by the operational amplifier.

Each thermistor is supplied with a current to keep it heated at about 150°C (302°F), the resultant heat is dissipated in the air and if the two thermistors are placed in different humidity conditions they show different degrees of heat conductivity leading to a potential difference between them causing an output voltage from the bridge circuit, the intensity of which is increased as the humidity of the air increases. Since the output is very minute, it is amplified by the operational amplifier.

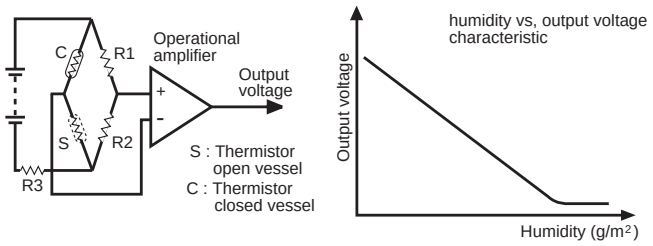

Detector Circuit of Humidity Sensor Circuit

This detector circuit is used to detect the output voltage of the humidity circuit to allow the LSI to control sensor cooking of the unit. When the unit is set in the sensor cooking mode, 32 seconds clearing cycle occurs than the detector circuit starts to function and the LSI observes the initial voltage available at its P65 terminal. With this voltage given, the switches SW1 to SW5 in the LSI are turned on in such a way as to change the resist ance values in parallel with P58 ~ P62 of IC2. Changing the resistance values results in that there is the same potential at both F-3terminalof the humidity sensor and P66 terminal of the LSI. The voltage of P65 terminal will indicate about -2.5V. This initial balancing is set up about 32 seconds after the unit is put in the Sensor Cooking mode. As the sensor cooking proceeds, the food is heated to generate moisture by which the resistance balance the bridge circuit is deviated to increase the voltage available at P65 terminal of the LSI. Then the LSI observes that voltage at P65 terminal and compares it with its initial value, and when the comparison rate reaches the preset value (fixed for each menu to be cooked), the LSI causes the unit to stop sensor cooking; thereafter, the unit goes in the next operation automatically. When the LSI starts to detect the initial voltage at P65 terminal 32 seconds after the unit has been put in the Sensor Cooking mode, if it is not possible to balance, of the bridge circuit due to disconnection of the humidity sensor, ERROR will appear on the display and the cooking is stopped.

1) Humidity sensor circuit

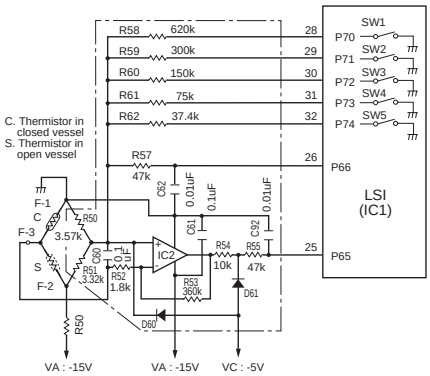

SERVICING FOR TOUCH CONTROL PANEL

Precautions for Handling Electronic Components

This unit uses CMOS LSI in the integral part of the circuits. When handling these parts, the following precautions should be strictly followed. CMOS LSI have extremely high impedance at its input and output terminals. For this reason, it is easily in fluenced by the surrounding high voltage power source, static electricity charge in clothes, etc. and sometimes it is not fully protected by the built-in protection circuit.

In order to protect CMOS LSI.

1. When storing and transporting, thoroughly wrap them in aluminium foil. Also wrap all PW boards containing them in aluminium foil.
2. When soldering, ground the technician as shown in the figure and use grounded soldering iron and work table.

Servicing of Touch Control Panel

We describe the procedures to permit servicing of the touch control panel of the microwave oven and the precautions you must take when doing so. To perform the servicing, power to the touch control panel is available either from the power line of the oven itself or from an external power source.

1. Servicing the touch control panel with power supply of the oven:

CAUTION

The high voltage transformer of the microwave oven is still live during servicing and presents a hazard.

Therefore, before checking the performance of the touch control panel,

1) Disconnect the power supply cord and then remove outer case.
2) Open the door and block it open.
3) Discharge high voltage capacitor.
4) Disconnect the leads to the primary of the power transformer.
5) Ensure that these leads remain isolated from other components and oven chassis by using insulation tape.
6) After that procedure, re-connect the power supply cord. After checking the performance of the touch control panel,

1) Disconnect the power supply cord.
2) Open the door and block it open.

3) Reconnect the leads to the primary of the power transformer.
4) Reinstall the outer case (cabinet).
5) Reconnect the power supply cord after the outer case is installed.
6) Run the oven and check all functions.
   a) On some models, the power supply cord between the touch control panel and the oven itself is so short that the two can't be separated. For those models, check and repair all the controls (sensor-related ones included) of the touch control panel while keeping it connected to the oven.
   b) On some models, the power supply cord between the touch control panel and the oven proper is long enough that they may be separated from each other. For those models, it is possible to check and repair the controls of the touch control panel while keeping it apart from the oven proper; in this case you must short both ends of the door sensing switch (on PWB) of the touch control panel with a jumper, which activates an operational state that is equivalent to the oven door being closed. As for the sensor-related controls of the touch control panel, checking them is possible if dummy resistor(s) with resistance equal to that of the controls are used.

2. Servicing the touch control panel with power supply from an external power source:

Disconnect the touch control panel completely from the oven proper, and short both ends of the door sensing switch (on PWB) of the touch control panel, which brings about an operational state that is equivalent to the oven door being closed. Connect an external power source to the power input terminal of the touch control panel, then it is possible to check and repair the controls of the touch control panel; it is also possible to check the sensor-related controls of the touch control panel by using the dummy resistor(s).

Servicing Tools

Tools required to service the touch control panel assembly.

1. Soldering iron: 60W (It is recommended to use a soldering iron with a grounding terminal.)
2. Oscilloscope: Single beam, frequency range: DC - 10MHz type or more advanced model.
3. Others: Hand tools

Other Precautions

1. Before turning on the power source of the control unit, remove the aluminium foil applied for preventing static electricity.
2. Connect the connectors of the key unit to the control unit being sure that the lead wires are not twisted.
3. After aluminium foil is removed, be careful that abnormal voltage due to static electricity etc. is not applied to the input or output terminals.
4. Attach connectors, electrolytic capacitors, etc. to PWB, making sure that all connections are tight.
5. Be sure to use specified components where high precision is required.

PRECAUTIONS FOR USING LEAD-FREE SOLDER

Employing lead-free solder

The "Main PWB" of this model employs lead-free solder. This is indicated by the "LF" symbol printed on the PWB and in the service manual. The suffix letter indicates the alloy type of the solder.

Example:

LFa

Sn-Ag-Cu

Indicates lead-free solder of tin, silver and copper

Using lead-free wire solder

When repairing a PWB with the "LF" symbol, only lead-free solder should be used. (Using normal tin/lead alloy solder may result in cold soldered joints and damage to printed patterns.)

As the melting point of lead-free solder is approximately 40ºC higher than tin/lead alloy solder, it is recommend that a dedicated bit is
used, and that the iron temperature is adjusted accordingly.

Soldering

As the melting point of lead-free solder (Sn-Ag-Cu) is higher and has poorer wettability, (flow), to prevent damage to the land of the PWB, extreme care should be taken not to leave the bit in contact with the PWB for an extended period of time. Remove the bit as soon as a good flow is achieved. The high content of tin in lead free solder will cause premature corrosion of the bit. To reduce wear on the bit, reduce the temperature or turn off the iron when it is not required.

Leaving different types of solder on the bit will cause contamination of the different alloys, which will alter their characteristics, making good soldering more difficult. It will be necessary to clean and replace bits more often when using lead-free solder. To reduce bit wear, care should be taken to clean the bit thoroughly after each use.

WARNING

To prevent an electric shock, take the following precautions:

1. **Before wiring:**
   - A. **Disconnect the power supply.**
   - B. **Open the door and wedge the door open.**
   - C. **Discharge the high voltage capacitor and wait for 60 seconds.**
2. **DO NOT let wire leads touch to the following parts:**
   - A. **High voltage parts: Magnetron, High voltage transformer, High voltage capacitor and High voltage rectifier assembly.**
   - B. **Hot parts: Oven lamp, Magnetron, High voltage transformer and Oven cavity.**
   - C. **Sharp edge: Bottom plate, Oven cavity, Waveguide flange, Chassis support and other metallic plates.**
   - D. **Movable parts (to prevent a fault) Fan blade, Fan motor, Switch, Switch lever, Open button.**
3. **Do not catch the wire leads in the outer case cabinet.**
4. **Insert the positive lock connector completely until its pin is locked. Make sure that the wire leads do not come off even if the wire leads are pulled.**
5. **To prevent an error function, connect the wire leads correctly, referring to the Pictorial Diagram.**

WARNING

Avoid possible exposure to microwave energy. Please follow instructions below before operating oven.

1. **Disconnect the power supply cord.**
2. **Make sure that a definite" click" can be heard when the microwave oven door is unlatched. (Hold the door in a closed position with one hand, then push the door open button with the other, this causes the latch leads to rise, it is then possible to hear a "click' as the door switches operate.)**
3. **Visually check the door and cavity face plate for damage (dents, cracks, signs of arcing etc.). Carry out any remedial work that is necessary before operating the oven.**

Do not operate the oven if any of the following conditions exist;

1. **Door does not close firmly.**
2. **Door hinge, support or latch hook is damaged.**
3. **The door gasket or seal is damaged.**
4. **The door is bent or warped.**
5. **There are defective parts in the door interlock system.**
6. **There are defective parts in the microwave generating and transmission assembly.**
7. **There is visible damage to the oven.**

Do not operate the oven:

1. **Without the RF gasket (Magnetron).**
2. **If the wave guide or oven cavity are not intact.**
3. **If the door is not closed.**
4. **If the outer case (cabinet) is not fitted.**

CAUTION

Disconnect oven from power supply before removing outer case. Discharge high voltage capacitor before touching any oven components or wiring after removing outer case.

NOTE

The following adjustments or component replacement can be performed without removing the oven from the wall.

1. Cook top lamps, sockets and grease filter.
2. Oven lamp, base cover and lamp glass assembly.
3. Turntable motor.
4. Hood louver.
5. Control panel assembly or components
6. Stirrer cover and stirrer antenna.

Hood Exhaust Louver Removal

1. Disconnect the power supply cord.
2. Open the oven door and block it open.
3. Remove the one (1) screw holding the outer case cabinet to the oven cavity front face plate (the position is front/ center on the outer case cabinet).
4. Remove the two (2) screws holding the hood louver to the oven cavity.
5. Remove the hood louver from the over by pushing the right and left tabs of the hood louver.
6. Now, the hood louver is free.

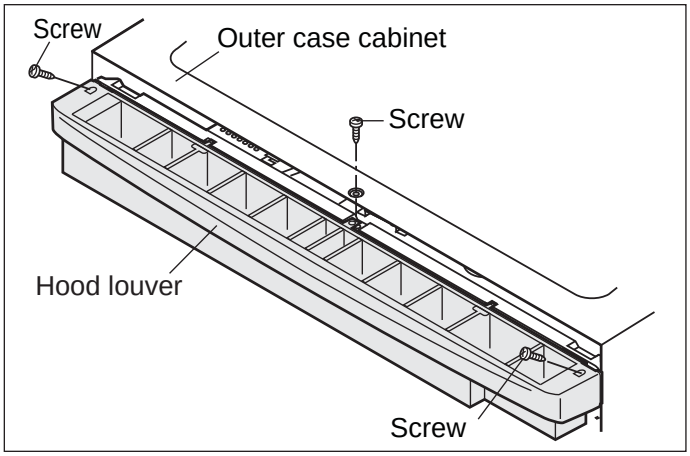

Figure 5-1. Hood Exhaust Louver Removal

Removal Of Oven From Wall

(Two persons recommended to remove the oven)

1. Disconnect the power supply cord, and uncoil the power supply cord.
2. Remove the turntable tray and support from the oven cavity.
3. While supporting the front of the oven, unfasten the two (2) screws holding the oven to the unit mounting plate.
4. While supporting the oven, remove the two (2) screws holding the oven (outer case cabinet) to the top cabinet.
5. Remove the oven from the unit mounting plate and pull the power cord out of the wall cabinet.
6. The oven is now free and can be placed on the work surface selected for servicing the oven.
7. Installation is the reverse of this procedure.

Outer Case Removal

Remove the oven from the wall and proceed as follows:

1. Disconnect the power supply cord.
2. Open the door and block it open.
3. Remove the one (1) screw holding the outer case cabinet to the oven cavity front face plate (the position is front/ center on the outer case cabinet).
4. Remove six (6) screws holding the rear stay to the hood fan motor or the oven, and remove it.
5. Remove the six (6) screws from the rear of the outer case cabinet.
6. Slide the outer case cabinet back about 1 inch (3 cm) to free it from retaining clips on the cavity face plate.
7. Disconnect the three (3) pin connector of the power supply cord from the wiring harness and remove the power supply cord together with the outer case.
8. Discharge high voltage capacitor.

CAUTION

Disconnect oven from power supply before removing outer case.

Discharge the high voltage capacitor Before touching any oven components or wiring.

Power Transformer Removal

REMOVAL

1. Disconnect the power supply cord, remove the oven from wall, and remove outer case. (Refer to procedure of “REMOVAL of OVEN FROM WALL” and “OUTER CASE REMOVAL”.) And proceed as follows.
2. Open the door and block it open.
3. Discharge high voltage capacitor.

NOTE

To discharge the high voltage capacitor, wait for 60 seconds and then short-circuit the connection of the high-voltage capacitor (that is the connecting lead of the high-voltage rectifier) against the chassis with the use of an insulated screwdriver.

4. Disconnect filament leads of transformer from the magnetron and capacitor.
5. Disconnect high voltage leads of capacitor from the transformer.
6. Remove one (1) screw holding the capacitor holder to fan duct and remove the capacitor.
7. Disconnect wire leads from transformer.
8. Remove three (3) screws holding the deflector to the cavity face plate and remove the deflector.
9. Remove three (3) screws holding the base cover to the cavity face plate and one (1) screw holding the base cover to the cavity back plate, and remove the base cover.
10. Remove two (2) screws holding the transformer to right base plate.

RE-INSTALL

1. Install by sliding the transformer on the right base plate with its primary terminals toward the fan duct.
2. Secure the transformer with two (2) screws to right base plate.
3. Re-connect wire leads (primary and high voltage) to the transformer and filament leads of transformer to magnetron and high voltage capacitor. Refer to “PICTORIAL DIAGRAM”.
4. Re-install the capacitor.
5. Re-install the base cover and the deflector.
6. Re-install the outer case and check that oven is operating properly.

CAUTION

Make sure the wire leads never touch the fan blade.

Hood Fan Motor, Hood Duct, Oven Lamp Socket And Humidity Sensor Removal

1. Disconnect the power supply cord and remove the oven from wall and remove outer case. (Refer to procedure of “Removal of Oven from Wall” and “Outer Case Removal”.)
2. Open the door and block it open.
3. Discharge high voltage capacitor.

NOTE

To discharge the high voltage capacitor, wait for 60 seconds and then short-circuit the connection of the high-voltage capacitor (that is the connecting lead of the high-voltage rectifier) against the chassis with the use of an insulated screwdriver.

4. Remove the hood louver refer to procedure of HOOD LOUVER REMOVAL.
5. Remove two (2) screws holding the chassis support right to the rear and face of the oven cavity flanges.
6. Remove two (2) screw holding the chassis support left to the rear flange and face of the oven cavity flanges.
7. Remove the both chassis support.
8. Remove the wire tie holding the hood fan harness to the hood duct by cutting it.
9. Disconnect the 6-pin connector of the hood fan motor from the main wire harness located at the right edge of the hood duct. Remove one (1) screw holding the hood intake duct to right base plate. Remove one (1) screw holding the hood duct to the hood intake duct right. And remove the hood intake duct right.
   Release the snap band from the cavity top plate.
10. Disconnect the two (2) grounding wire from the chassis support left.
11. Now, the hood fan motor is free.

NOTE

When the hood fan motor is reinstalled, hold the hood fan motor harness at the right edge of the hood duct with one wire tie.

12. Remove the one (1) screw holding the noise filter assembly to the fan duct.
13. Disconnect the connector CN-F and CN-D from the control unit.
14. Remove one (1) screw holding the hood duct to the oven cavity top plate.

Continued on next page.

15. Remove the one (1) screw holding the hood duct to the fan duct.
16. Release the 6-pin connector and the 3-pin connector of the main harness A from the hood duct.
17. Disconnect the control harness A from the control harness B.
18. Disconnect the connector of control harness A from the cavity face plate.
19. Remove the hood duct from the oven cavity by lifting it up.
20. Release the snap band of control harness A from the hood duct.
21. Release the harness of the sensor assembly and the control harness A from four(4) wire holders of the hood duct.
22. Remove two (2) screws holding the sensor assembly to the hood duct.
23. Now, the sensor assembly is free.
24. Lift the oven lamp cover up and remove the oven lamp cover from hood duct.
25. Remove the oven lamp (Refer to the procedure of “Oven lamp removal”).
26. Disconnect the wire leads from the oven lamp socket.
27. Rotate the oven lamp socket to remove from hood duct.
28. Now, the oven lamp socket is free.

Magnetron Removal

1. Disconnect the power supply cord, remove the oven from wall and remove outer case (Refer to procedure of “Removal of Oven from Wall” and “Outer Case Removal”.)
2. Open the door and block it open.
3. Discharge high voltage capacitor.

NOTE

To discharge the high voltage capacitor, wait for 60 seconds and then short-circuit the connection of the high-voltage capacitor (that is the connecting lead of the high-voltage rectifier) against the chassis with the use of an insulated screwdriver.

4. Remove two (2) screws holding the chassis support right to the rear and face of the oven cavity flanges.
5. Remove the one (1) screw holding the noise filter assembly to the fan duct.
6. Disconnect the wire leads from the fan motor.
7. Disconnect the high voltage wire leads of the high voltage rectifier assembly from the magnetron.
8. Disconnect the filament lead of the transformer from the magnetron.
9. Remove the one(1) screw holding the hood duct to the fan duct and remove the one (1) screw holding the oven cavity top plate to the fan duct.
10. Remove the one(1) screw holding the right base plate to the fan duct and remove the fan duct assembly.
11. Remove the power transformer from the right base plate, referring to “POWER TRANSFORMER REMOVAL”.
12. Carefully remove four (4) mounting screws holding the magnetron to waveguide. When removing the screws hold the magnetron to prevent it from falling.
13. Remove the magnetron from the unit with care so the magnetron tube should not be hit by any metal object around the tube.

CAUTION

When replacing the magnetron, be sure the R.F. Gasket is in place and mounting screws are tightened securely.

High Voltage Rectifier And High Voltage Capacitor Removal

1. Disconnect the power supply cord, remove the oven from wall and remove outer case (Refer to procedure of “Removal of Oven from Wall” and “Outer Case Removal”.)
2. Open the door and block it open.
3. Discharge high voltage capacitor.

NOTE

To discharge the high voltage capacitor, wait for 60 seconds and then short-circuit the connection of the high-voltage capacitor (that is the connecting lead of the high-voltage rectifier) against the chassis with the use of an insulated screwdriver.

4. Disconnect the high voltage wire leads with high voltage rectifier from the magnetron.
5. Disconnect filament lead of the transformer from high voltage capacitor.
6. Disconnect high voltage wire from capacitor.
7. Remove one (1) screw holding capacitor holder and high voltage rectifier to the fan duct.
8. Disconnect the high voltage rectifier assembly from the high voltage capacitor and remove one (1) screw holding the voltage rectifier assembly to the capacitor holder.

9. Now, the high voltage rectifier assembly is free.
10. Remove capacitor from the holder.
11. Now, the high voltage capacitor is free.

CAUTION

When replacing the high voltage rectifier assembly, the ground side terminal must be secured firmly with a grounding screw.

Hood Fan Thermostat (60°c On) Removal

1. Disconnect the power supply cord, remove the oven from wall and remove outer case (Refer to procedure of “Removal of Oven from Wall” and “Outer Case Removal”.
2. Open the door and block it open.
3. Discharge high voltage capacitor.

NOTE

To discharge the high voltage capacitor, wait for 60 seconds and then short-circuit the connection of the high-voltage capacitor (that is the connecting lead of the high-voltage rectifier) against the chassis with the use of an insulated screwdriver.

4. Disconnect the wire leads from the hood fan thermostat (60°C ON).
5. Remove one (1) screw holding the thermostat (60°C ON) to the right base plate.
6. Remove the hood fan thermostat (60°C ON) from the right base plate.
7. Now, the hood fan thermostat (60°C ON) is free.

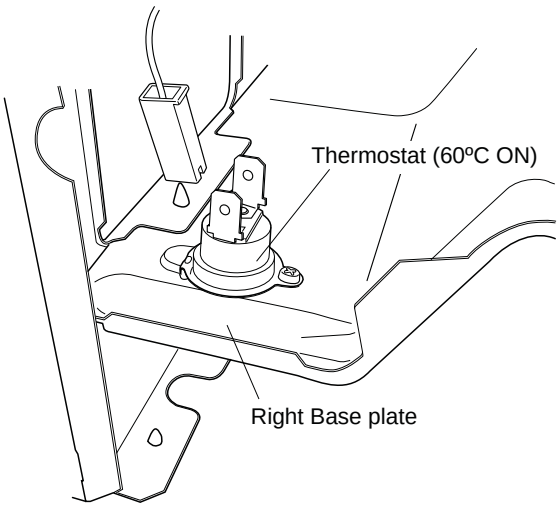

Figure 5-2 Hood Fan Thermostat Removal.

Cooling Fan Motor Removal

REMOVAL

1. Disconnect the power supply cord, remove the oven from wall and remove outer case (Refer to procedure of “Removal of Oven from Wall” and “Outer case Removal”.)
2. Open the door and block it open.
3. Discharge high voltage capacitor.

NOTE

To discharge the high voltage capacitor, wait for 60 seconds and then short-circuit the connection of the high-voltage capacitor (that is the connecting lead of the high-voltage rectifier) against the chassis with the use of an insulated screwdriver.

4. Remove two (2) screws holding the chassis support right to the rear and face of the oven cavity flange.
5. Remove the one (1) screw holding the noise filter assembly to the fan duct.
6. Disconnect the wire leads from the fan motor.
7. Disconnect the high voltage wire leads of the high voltage rectifier assembly from the magnetron.
8. Disconnect the filament lead of the transformer from the magnetron.
9. Remove the one(1) screw holding the hood duct to the fan duct and remove the one (1) screw holding the oven cavity top plate to the fan duct.
10. Remove the one (1) screw holding the right base plate to the fan duct and remove the fan duct assembly
11. Remove the fan blade from the fan motor shaft according the following procedure.
12. Hold the edge of the rotor of the fan motor by using a pair of groove joint pliers.

CAUTION

Make sure that any pieces do not enter the gap between the rotor and the stator of the fan motor. Because the rotor is easy to be shaven by pliers and metal pieces may be produced.

Do not touch the pliers to the coil of the fan motor because the coil may be cut or damaged. Do not disfigure the bracket by touching with the pliers.

13. Remove the fan blade from the shaft of the fan motor by pulling and rotating the fan blade with your hand.
14. Now, the fan blade will be free.

CAUTION

Do not re-use the removed fan blade because the hole (for shaft) may be larger than normal

15. Remove the two (2) screws holding the fan motor to the fan duct.
16. Now, the fan motor is free.

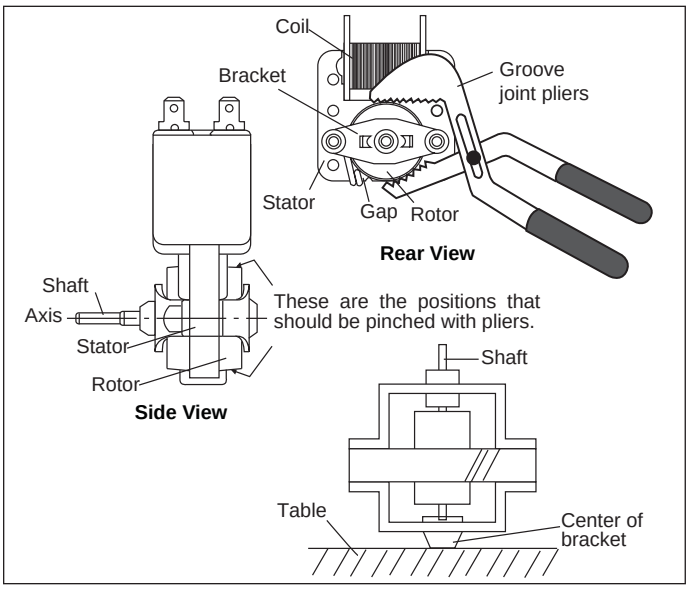

Figure 5-3. Fan Motor Components

INSTALLATION

1. Install the fan motor to the fan duct with the two (2) screws.
2. Install the fan blade to the fan motor shaft according to the following procedure.
3. Hold the center of the bracket which supports the shaft of the fan motor on the flat table.
4. Apply the screw lock tight into the hole (for shaft) of the fan blade.
5. Install the fan blade to the shaft of fan motor by pushing the fan blade with a small, light weight, ball peen hammer or rubber mallet.

CAUTION

Do not hit the fan blade strongly when installing because the bracket may be deformed. Make sure that the fan blade rotates smoothly after installation. Make sure that the axis of the shaft is not slanted.

6. Install the fan duct to the oven cavity, base plate right and hood duct with the three (3) screws.
7. Connect the high voltage wire leads with high voltage rectifier from the magnetron, referring to the pictorial diagram.
8. Connect filament lead of the transformer from high voltage capacitor, referring to the pictorial diagram.
9. Connect high voltage wire from capacitor, referring to the pictorial diagram.
10. Connect the wire leads to the fan motor, referring to the pictorial diagram.
11. Refer to procedure of “Outer case Removal”. And reverse their procedure. And re-install the outer case.

Turntable Motor Removal

1. Disconnect the power supply cord.
2. Open the door and block it open.
3. Remove the three(3) screws holding the deflector to the cavity face plate.
4. Remove the four (4) screws holding the base cover to the oven cavity.
5. Remove the base cover from the oven cavity by pulling down and moving to the left slightly.
6. Disconnect the wire leads from the turntable motor.
7. Remove one (1) screw holding turntable motor to the oven cavity.
8. Now the turntable motor is free.

Antenna Motor Removal

1. Disconnect the power supply cord and remove the oven from wall and outer case. (Refer to procedure of “Removal of Oven from Wall” and Outer case Removal”)
2. Open the door and block it open.
3. Discharge high voltage capacitor.

NOTE

To discharge the high voltage capacitor, wait for 60 seconds and then short-circuit the connection of the high-voltage capacitor (that is the connecting lead of the high-voltage rectifier) against the chassis with the use of an insulated screwdriver.

4. Remove the hood duct from the oven cavity, referring to the procedure of “HOOD FAN MOTOR, HOOD DUCT AND OVEN LAMP SOCKET REMOVAL”.
5. Disconnect the wire leads from the antenna motor.
6. Remove the one (1) screw holding the antenna motor to the waveguide of the oven cavity.
7. Remove the antenna motor from the waveguide.

8. Now, the antenna motor is free.
9. When installing the antenna motor, the shaft of antenna motor must be inserted to the antenna shaft. Refer to the procedure of “STIRRER COVER AND STIRRER FAN INSTALLATION”.

Stirrer Cover And Stirrer Antenna Installation

1. Put the stirrer antenna fan on the wave guide to match the stirrer antenna shaft to the center of the stirrer hole.
2. Insert the shaft of stirrer antenna to the shaft of stirrer antenna motor.
3. Rotate the antenna holder to lock at the cavity top plate.
4. Insert the cutout of stirrer cover to the tabs on the ceiling.
5. Install the stirrer cover to the oven cavity, and secure it by one canoe clip.

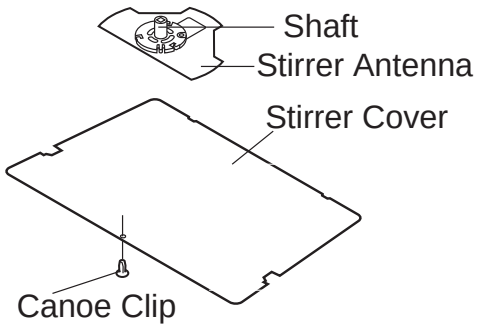

Figure 5-4. Stirrer Antenna/Cover

Oven Lamp Removal

1. Disconnect the power supply cord.
2. Remove the hood louver from the oven. (Refer to procedure of “HOOD LOUVER REMOVAL”)
3. Lift the oven lamp cover up.
4. Now, the oven lamp and the socket are found.
5. Screw the oven lamp off from the lamp socket.
6. Now, the oven lamp is free.

Positive Lock® Connector (No-Case Type) Removal

1. Disconnect the power supply cord and remove the oven from wall and outer case. (Refer to procedure of “Removal of Oven from Wall” and Outer case Removal”)
2. Open the door and block it open.
3. Discharge high voltage capacitor.

NOTE

To discharge the high voltage capacitor, wait for 60 seconds and then short-circuit the connection of the high-voltage capacitor (that is the connecting lead of the high-voltage rectifier) against the chassis with the use of an insulated screwdriver.

4. Push the lever of positive lock® connector.
5. Pull down on the positive lock® connector.

CAUTION

When connecting the positive lock® connectors to the terminals, install the positive lock® so that the lever faces you.

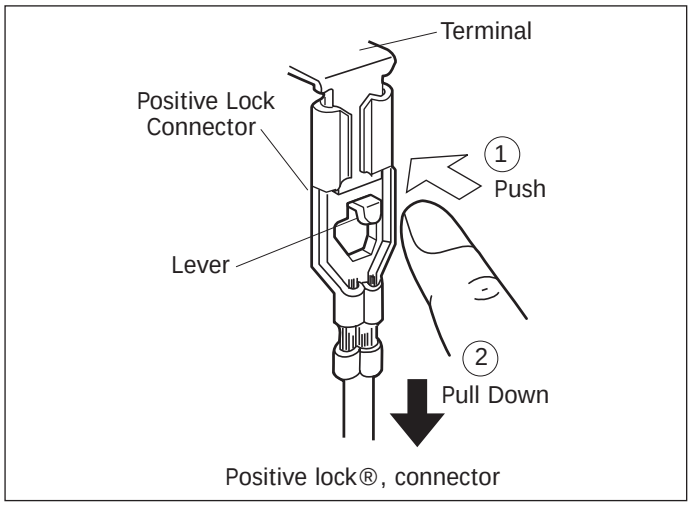

Figure 5-5. Positive Lock Connector

Right Panel Assembly And Power Unit Removal

1. Disconnect the power supply cord.
2. Open the door and block it open.
3. Remove the hood louver from the oven. (Refer to procedure of “HOOD LOUVER REMOVAL”)
4. Remove one (1) screw holding the right panel to the oven cavity front face plate.
5. Release the right panel from the oven cavity front face plate by lifting it up.
6. Disconnect the wire leads from the relays RY1 and RY2.
7. Disconnect the connectors CN-A, CN-B, CN-C, CN-D, CN-E and CN-F from the control unit.
8. Remove the right panel assembly from the oven.
9. Now, the right panel assembly is free.
10. Remove four (4) screws holding the power unit to the key fixing plate and right panel.
11. Now, the power unit is free.

Door Sensing Switch, Secondary Interlock Switch And Monitor Switch Removal

REMOVAL

1. Disconnect the power supply cord and remove the oven from wall and remove outer case. (Refer to procedure of “Removal of Oven from Wall” and “Outer case Removal”)
2. Open the door and block it open.
3. Discharge high voltage capacitor.

NOTE

To discharge the high voltage capacitor, wait for 60 seconds and then short-circuit the connection of the high-voltage capacitor (that is the connecting lead of the high-voltage rectifier) against the chassis with the use of an insulated screwdriver.

4. Remove the control panel assembly, referring to the procedure of “CONTROL PANEL ASSEMBLY, CONTROL UNIT AND KEY UNIT REMOVAL”.
5. Remove the two (2) screws holding the latch hook to the oven cavity front flange.
6. Remove the latch hook from the oven cavity front flange.
7. Disconnect the wire leads of each switch.
8. Remove each switch from the latch hook by pushing the one (1) stopper tub holding each switch.
9. Now, each switch is free.

REINSTALL

1. Re-install each switch in its place. The secondary interlock switch is in the lower position, door sensing switch is in the upper position and the monitor switch is in the middle position.
2. Re-connect wire leads to each switch. Refer to pictorial diagram.
3. Secure the latch hook (with two (2) mounting screws) to oven cavity front flange.
4. Make sure that the monitor switch is operating properly and check continuity of the monitor circuit. Refer to chapter “Test Procedure” and “Adjustment procedure”.

Door Sensing Switch, Secondary Interlock Switch, And Monitor Switch Adjustment

1. Disconnect the power supply cord and remove the oven from wall and remove outer case. (Refer to procedure of “Removal of Oven from Wall” and “Outer case Removal”)
2. Open the door and block it open.
3. Discharge high voltage capacitor.

NOTE

To discharge the high voltage capacitor, wait for 60 seconds and then short-circuit the connection of the high-voltage capacitor (that is the connecting lead of the high-voltage rectifier) against the chassis with the use of an insulated screwdriver.

4. Remove the right panel assembly, referring to the procedure of “RIFGT PANEL ASSEMBLY AND POWER UNIT REMOVAL”.

If the door sensing switch, secondary interlock switch and monitor switch do not operate properly due to a misadjustment, the following adjustment should be made.

5. Loosen the two (2) screws holding latch hook to the oven cavity front flange.
6. With door closed, adjust latch hook by moving it back and forth, and up and down. In and out play of the door allowed by the upper and lower position of the latch hook should be less than 0.5mm. The vertical position of the latch hook should be adjusted so that the door sensing switch, secondary interlock switch are activated with the door closed. The horizontal position of the latch hook should be adjusted so that the monitor switch is activated with the door closed.
7. Secure the screws with washers firmly.

8. Check all of the switches operation. If any switch has not activated with the door closed, loosen screw and adjust the latch hook position.

After adjustment, check the following.

1. In and out play of door remains less than 0.5mm when in the latched position. First check upper position of latch hook, pushing and pulling upper portion of door toward the oven face.

   Then check lower portion of the latch hook, pushing and pulling lower portion of the door toward the oven face. Both results (play in the door) should be less than 0.5mm.
2. The door sensing switch, and secondary interlock switch interrupt the circuit before the door can be opened.
3. Monitor switch contacts close when door is opened.
4. The contact of door sensing switch and secondary interlock switch open within 1.2mm gap between right side of cavity face plate and door when door is open.
5. Re-install outer case and check for microwave leakage around door with an approved microwave survey meter.
   (Refer to Microwave Measurement Procedure.)

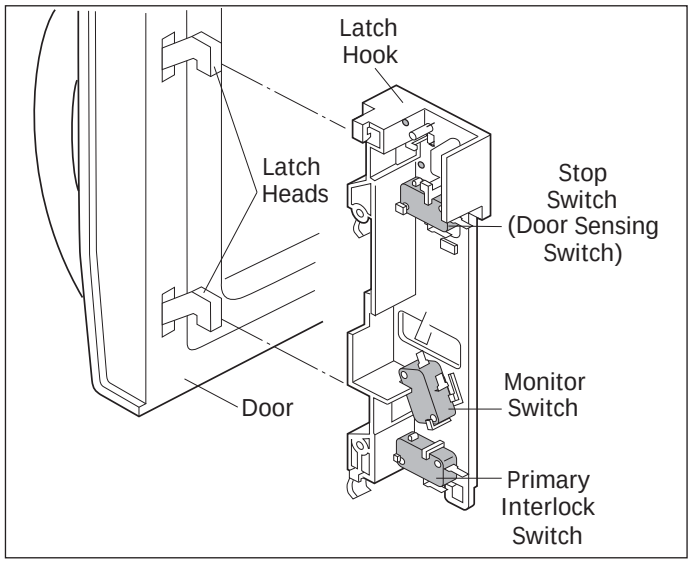

Figure 5-6. Latch Switch Adjustments

Door Replacement

REMOVAL

1. Disconnect the power supply cord and remove the oven from wall and remove outer case. (Refer to procedure of “Removal of Oven from Wall” and “Outer case Removal”)
2. Open the door and block it open.
3. Discharge high voltage capacitor.

NOTE

To discharge the high voltage capacitor, wait for 60 seconds and then short-circuit the connection of the high-voltage capacitor (that is the connecting lead of the high-voltage rectifier) against the chassis with the use of an insulated screwdriver.

4. Remove the hood louver from the oven. (Refer to the procedure of “HOOD LOUVER REMOVAL”.)
5. Insert a putty knife (thickness of about 0.5mm) into the gap A between the door stopper and the choke cover as shown in Figure 5-8 to free engaging parts.
6. Lift up the door stopper.
7. Now, the door stopper is free from the door assembly.
8. Lift up the door assembly to release the upper and lower door hinge pins from the upper and lower oven hinges.
9. Now, the door assembly is free.

NOTE

When the individual parts are replaced, refer to “Door Disassembly”.

Reinstall

1. On re-installing door, insert the lower oven hinge to lower door hinge pin.
2. Insert the upper oven hinge to the upper door hinge pin.
3. Shut the door (close the contacts of interlock switches).
4. Make sure upper and lower oven hinges are inserted into the upper an lower door hinge pins.
5. Make sure the door is parallel with oven face lines (left and upper side lines) and door latch heads pass through latch holes correctly.
6. Re-install the door stopper to the door assembly.
7. Re-install the hood louver to the oven cavity front face plate.

NOTE

After any service to the door:

1. Make sure that door sensing switch and secondary interlock switch are operating properly. (Refer to chapter “Test Procedures”.).
2. An approved microwave survey meter should be used to assure compliance with proper microwave radiation emission limitation standards.

After any servicing, make sure of the following:

1. Door latch heads smoothly catch latch hook through latch holes and that latch head goes through center of latch hole.
2. Deviation of door alignment from horizontal line of cavity face plate is to be less than 1.0mm.
3. Door is positioned with its face pressed toward cavity face plate.
4. Re-install outer case and check for microwave leakage around door with an approved microwave survey meter.

(Refer to Microwave Measurement Procedure.)

NOTE

The door on a microwave oven is designed to act as an electronic seal preventing the leakage of microwave energy from oven cavity during cook cycle.
This function does not require that door be air-tight, moisture (condensation)-tight or light-tight. Therefore, occasional appearance of moisture, light or sensing of gentle warm air movement around oven door is not abnormal and do not of themselves indicate a leakage of microwave energy from oven cavity.

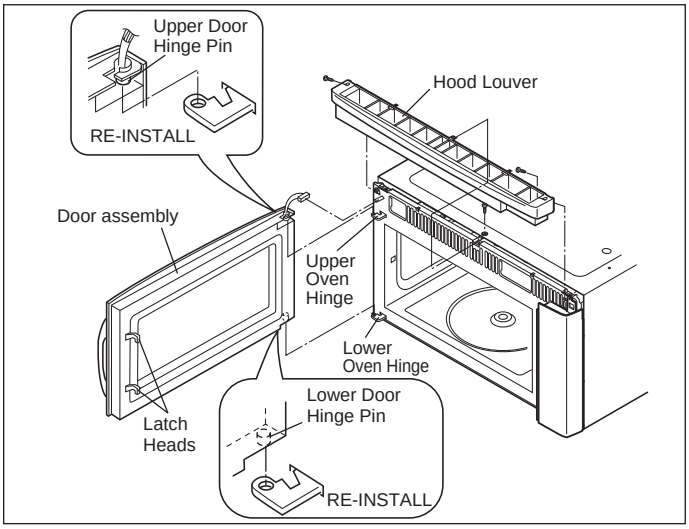

Figure 5-7. Door Components

Door Disassembly

REMOVAL

1. Disconnect the power supply cord and remove the oven from wall and remove outer case. (Refer to procedure of “Removal of Oven from Wall” and “Outer case Removal”)
2. Open the door and block it open.
3. Discharge high voltage capacitor.

NOTE

To discharge the high voltage capacitor, wait for 60 seconds and then short-circuit the connection of the high-voltage capacitor (that is the connecting lead of the high-voltage rectifier) against the chassis with the use of an insulated screwdriver.

4. Remove the hood louver from the oven cavity. (Refer to the procedure of “HOOD LOUVER REMOVAL”.)
5. Remove door assembly, refer to “Door Replacement”.
   Replacement of door components are as follows:
6. Place door assembly on a soft cloth with latches facing up.

NOTE

As engaging part of choke cover and door frame are provided at 16 places, do not force any particular part.

CHOKE COVER

7. Insert a putty knife (thickness of about 0.5mm) into the gap A between the choke cover and door stopper and between the choke cover and the door frame as shown Figure 5-8 to free engaging parts.
8. Pry the choke cover by inserting a putty knife in order shown in Figure 5-8.
9. Now choke cover is free from door panel and door frame.

LATCH SPRING, LATCH HEAD AND DOOR PANEL

10. Release the latch spring from the tab of the latch head and tab of the door panel.
11. Release the latch head from the door panel.
12. Now, the latch spring, latch head and door panel are free.

NOTE

It is easier to release the engaging parts of the upper or lower door hinge pin side at first.

DOOR FRAME ASSEMBLY

13. Remove eight (8) screws holding the door panel to the door frame assembly.
14. Release the door frame assembly from the door panel.

NOTE

It is easier to release the engaging parts of the upper or lower door hinge pin side at first.

15. Now, door frame assembly is free.

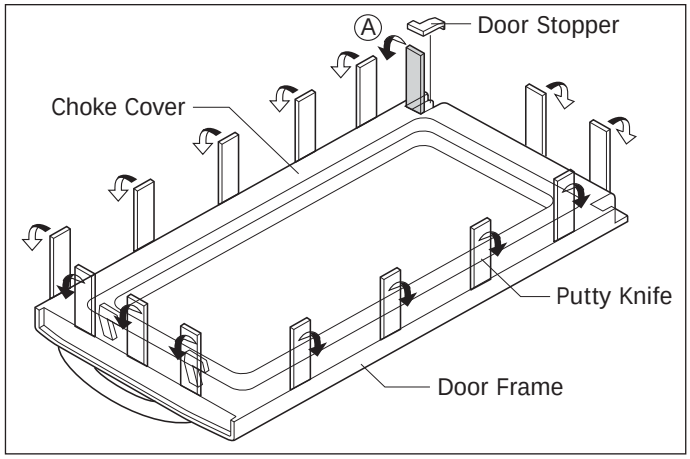

Figure 5-8. Door Disassembly

DISPLAY UNIT

16. Remove two (2) screws holding the control unit cover to the door flame assembly.
17. Release the control unit cover from the door flame assembly.
18. Disconnect the connect CN-J from the display unit.
19. Disconnect the connector CN-G from the switch unit.
20. Remove the six (6) screws holding the display unit to the key fixing frame.
21. Now the display unit is free.

Cook Top Lamp Socket Removal

1. Disconnect the power supply cord.
2. Remove the three (3) screws holding the deflector to the base cover.
3. Remove the four (4) screws holding the base cover to the oven cavity.
4. Pull down and slide to left the base cover. And remove the base cover from the cavity back plate.
5. Disconnect the wire leads from the lamp socket.
6. Screw the oven lamp off the lamp socket.
7. Screws the lamp socket off the lamp mounting angle.
8. Now, the lamp socket is free.

CIRCUIT DIAGRAMS

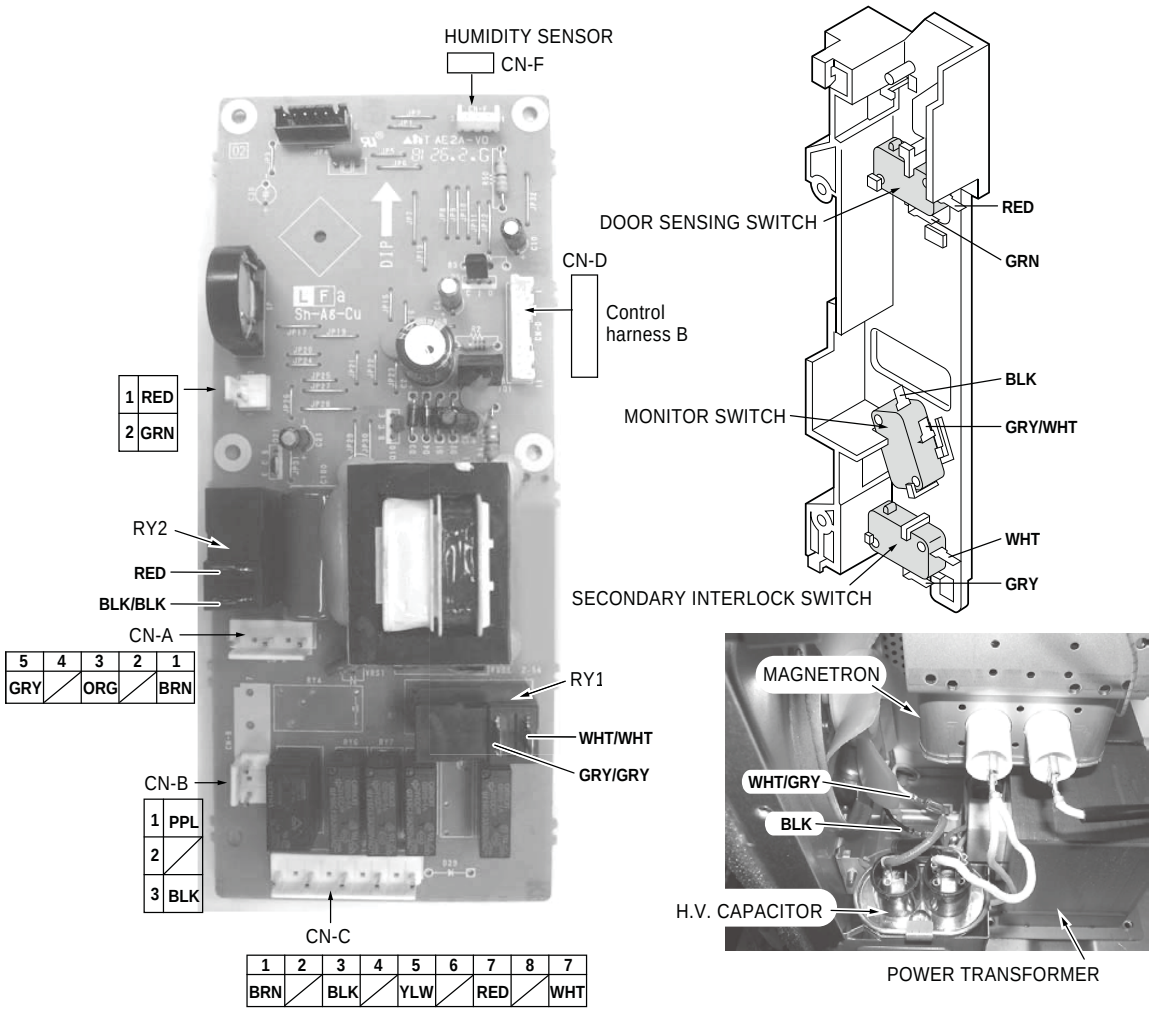

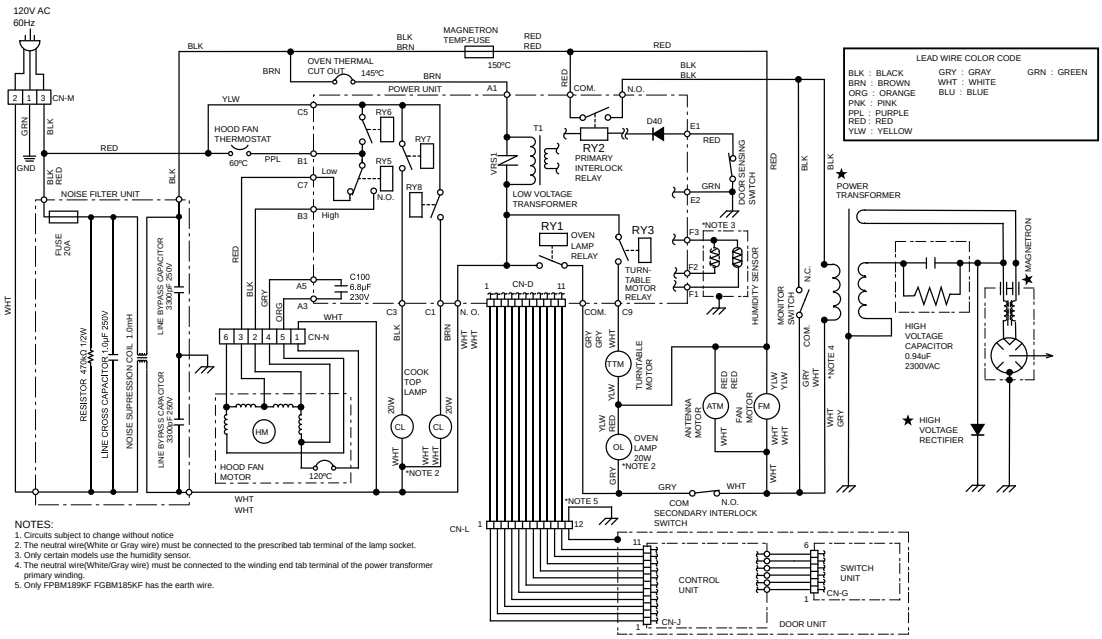

NOTES:
1. Circuits subject to change without notice
2. The neutral wire(White or Gray wire) must be connected to the prescribed tab terminal of the lamp socket.
3. Only certain models use the humidity sensor.
4. The neutral wire(White/Gray wire) must be connected to the winding end tab terminal of the power transformer primary winding.
5. Only FPBM189KF FGBM185KF has the earth wire.

Wiring Diagram

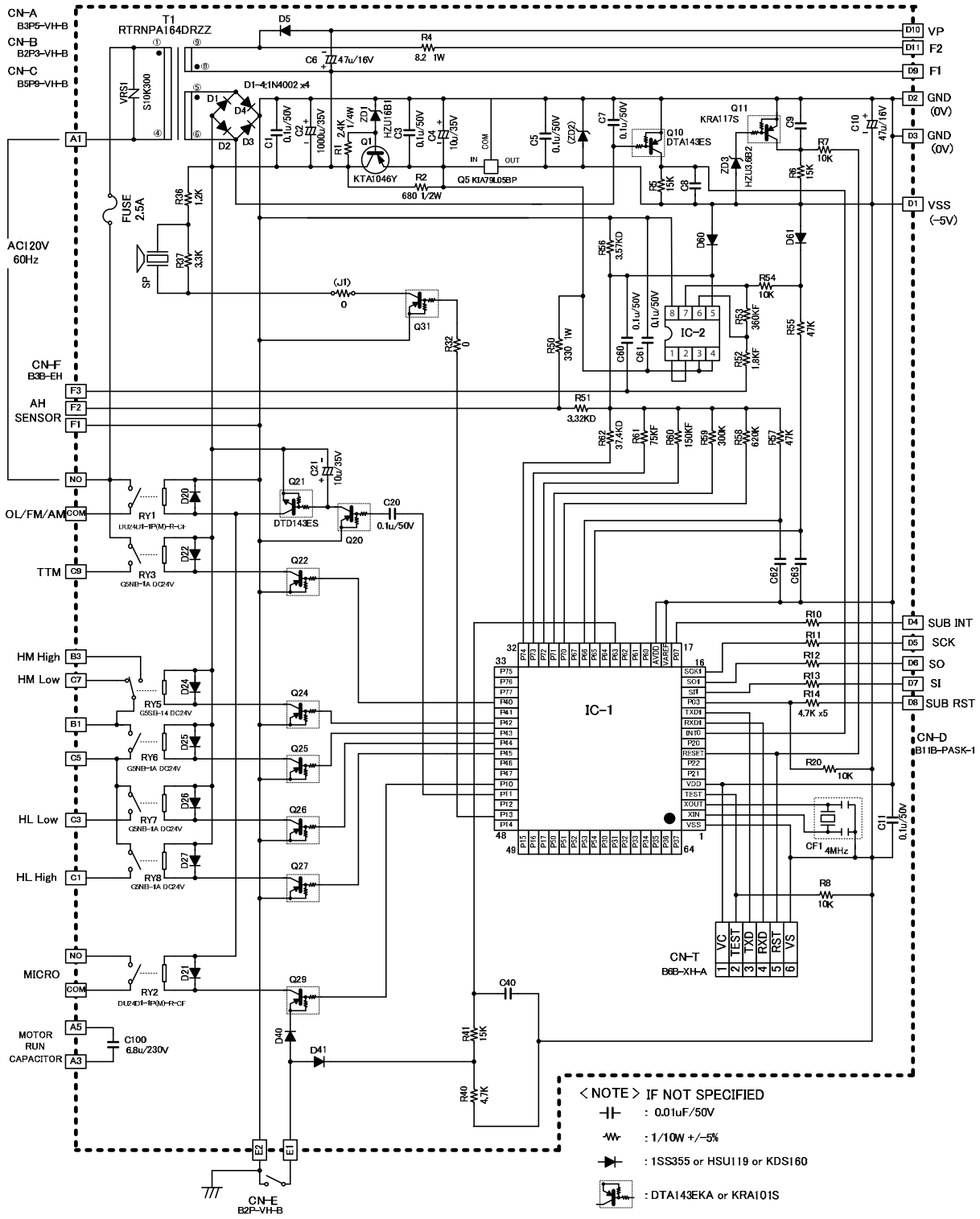

Control Wiring Schematic

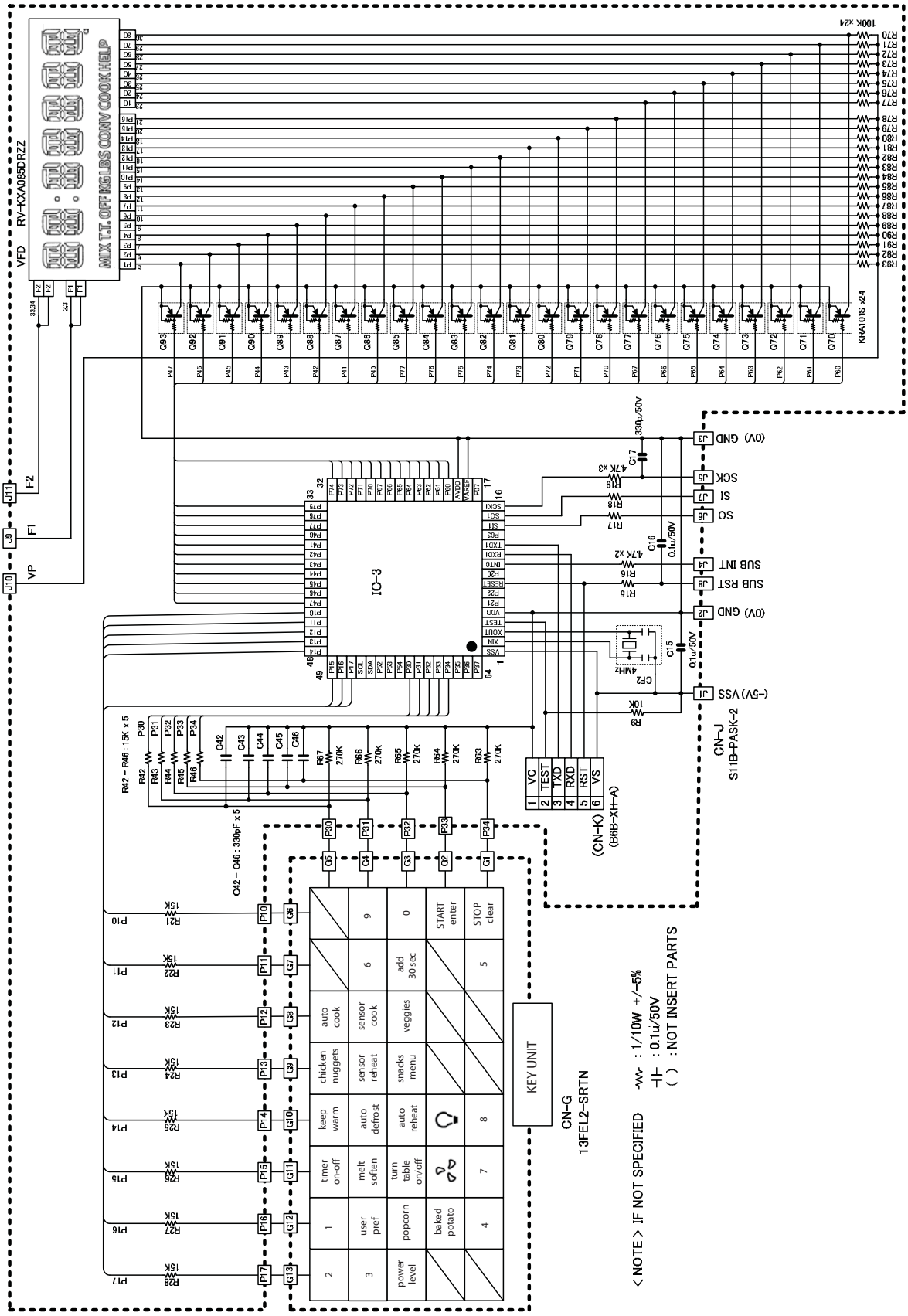

Printed Wiring Board

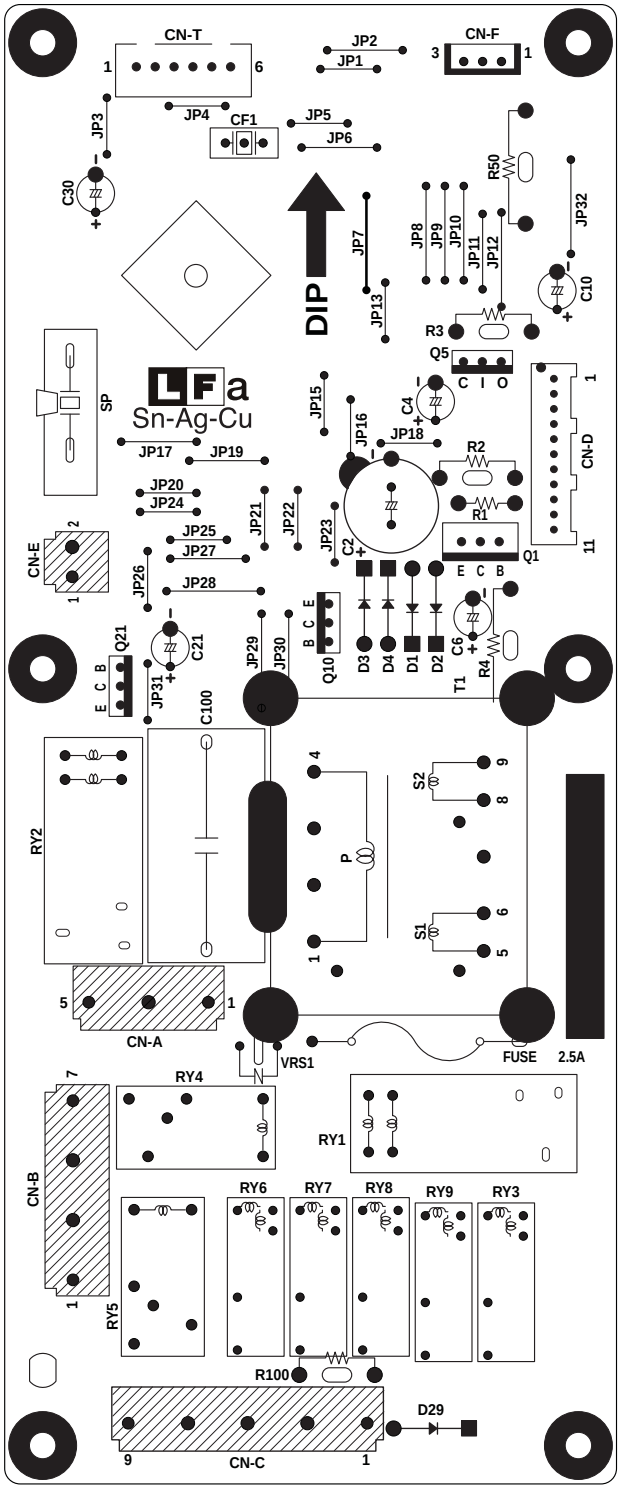

Parts List

FGBM185K / FGBM187K / FPBM189K

OVEN,CABINET

Model Index:
A FGBM185K (FGBM185KBB)
B FGBM185K (FGBM185KFB)
C FGBM185K (FGBM185KWB)
D FGBM187K (FGBM187KBB)
E FGBM187K (FGBM187KWB)
F FPBM189K (FPBM189KFB)

POS. NO							DESCRIPTION
1 #	A	B	C	D	E	F	Rectifier, high voltage
2 #	A	B	C	D	E	F	Capacitor, high voltage
3 #	A	B	C	D	E	F	Motor, turntable
4 #	A	B	C	D	E	F	Motor, stirrer fan
5 #	A	B	C	D	E	F	Thermal Cutout, hood
6 #	A	B	C	D	E	F	Transformer, power
7 #	A	B	C	D	E	F	Magnetron
8 #	A	B	C	D	E	F	Switch, interlock, primary/door
9 #	A	B	C	D	E	F	Switch, monitor, w/ceramic fuse
10 #	A	B	C	D	E	F	Power Cord, electric
11 #	A	B	C	D	E	F	Lampholder, socket
12 #	A	B	C	D	E	F	Motor, hood fan
13 #	A	B	C	D	E	F	Motor, cooling fan
14 #	A	B	C	D	E	F	Filter, noise, electronic
15 #	A	B	C	D	E	F	Thermal Cutout, oven cavity
16 #	A	B	C	D	E	F	Sensor, humidity, cook control
17 #	A	B	C	D	E	F	Fuse, magnetron
19	A	B	C	D	E	F	Lamp, incandescent, 20 W, (3)
22	A	B	C	D	E	F	Wiring Diagram, schematic, label
23	A	B	C	D	E	F	Lens/Frame Assy, lamp, black
23-1	A	B	C	D	E	F	Frame, lens holder, black
23-2	A	B	C	D	E	F	Lens, cooktop lamp, glass
24	A	B	C	D	E	F	Bracket, lamp housing
25	A	B	C	D	E	F	Plate, rear stay
26	A	B	C	D	E	F	Cover, unit base
27	A	B	C	D	E	F	Cover, lamp, oven cavity
28	A	B	C	D	E	F	Duct, cooling fan
29	A	B	C	D	E	F	Bracket, unit mtg plate, rear
34	A	B	C	D	E	F	Screw, 3 mm x 8 mm
36	A	B	C	D	E	F	Damper Assembly, exhaust
37	A	B	-	D	-	F	Cabinet, outer casing, black
37	-	-	C	-	E	-	Cabinet, outer casing, white
38	A	B	C	D	E	F	Tray, turntable, glass
39	A	B	C	D	E	F	Retainer, capacitor strap
40	A	B	C	D	E	F	Cover, stirrer fan
41 #	A	B	C	D	E	F	Stirrer Assembly
42	A	B	C	D	E	F	Support Assy, turntable, roller
43	A	B	C	D	E	F	Bushing, motor shaft, turntable
44	A	B	C	D	E	F	Latch Hook
45	A	B	C	D	E	F	Cover, wiring harness
46 #	A	B	C	D	E	F	Fan Blade, mag cooling fan
47	A	B	C	D	E	F	Bushing, grommet, power cord
48 #	A	B	-	D	-	-	Louver Assembly, hood, black
48 #	-	-	C	-	E	-	Louver Assembly, hood, white
48 #	-	-	-	-	-	F	Louver Assembly, hood, gray/stainless

Functional Parts
* Non-Illustrated Parts

FGBM185K / FGBM187K / FPBM189K

OVEN,CABINET

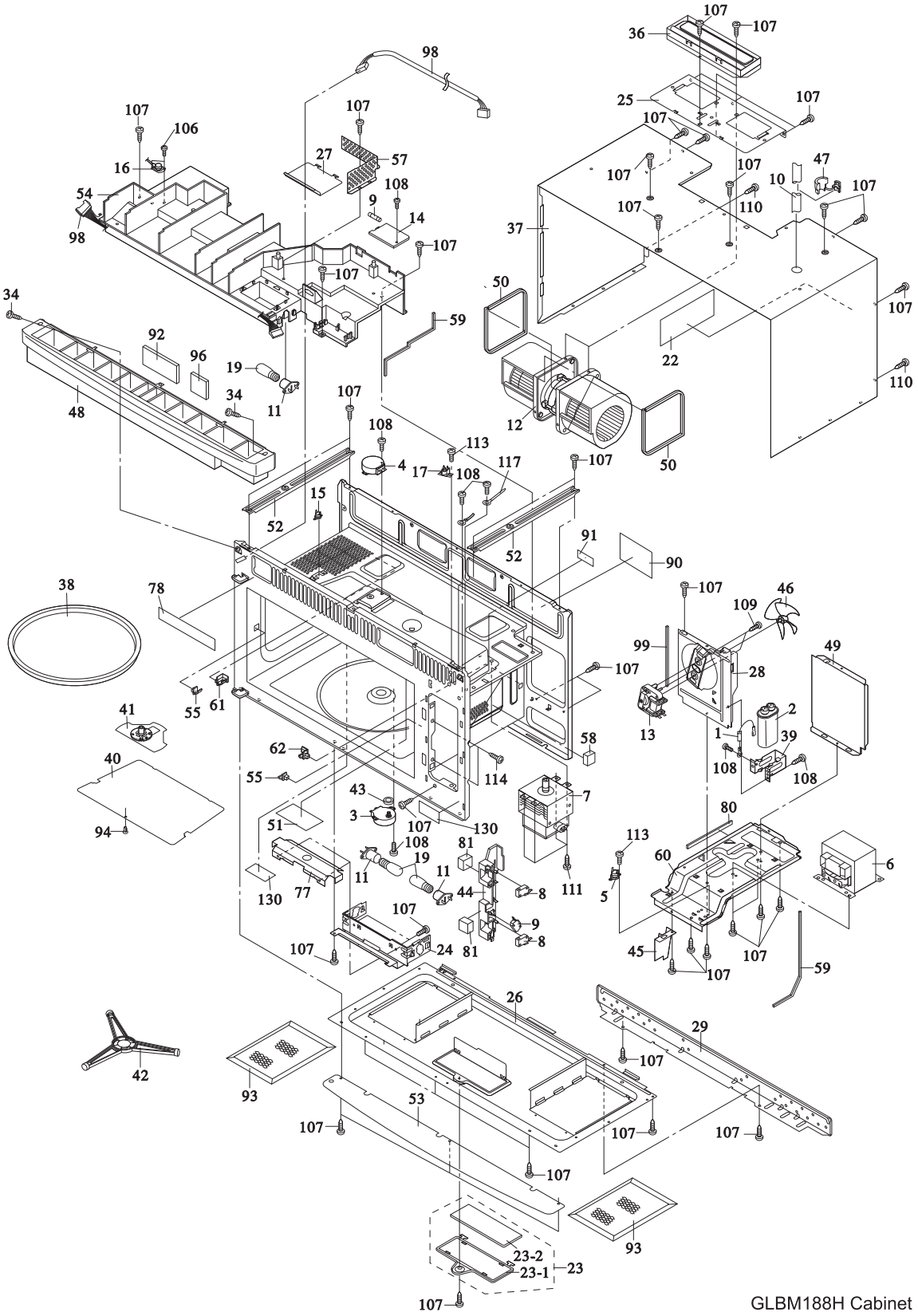

GLBM188H Cabinet

FGBM185K / FGBM187K / FPBM189K

OVEN,CABINET

Model Index:
A FGBM185K (FGBM185KBB)
B FGBM185K (FGBM185KFB)
C FGBM185K (FGBM185KWB)
D FGBM187K (FGBM187KBB)
E FGBM187K (FGBM187KWB)
F FPBM189K (FPBM189KFB)

POS. NO							DESCRIPTION
49	A	B	C	D	E	F	Duct, hood intake, right side
50	A	B	C	D	E	F	Gasket, hood fan motor, cushion
51	A	B	C	D	E	F	Lens, lamp filter
52	A	B	C	D	E	F	Support, chassis
53	A	B	-	D	-	F	Deflector, black
53	-	-	C	-	E	-	Deflector, white
54	A	B	C	D	E	F	Duct, exhaust hood
55	A	B	C	D	E	F	Support, rack, front
57	A	B	C	D	E	F	Barrier
58	A	B	C	D	E	F	Cushion, transformer pad
59	A	B	C	D	E	F	Cushion, intake duct, seal
60	A	B	C	D	E	F	Plate, base, right
61	A	B	C	D	E	F	Support, rack, left rear
62	A	B	C	D	E	F	Support, rack, right rear
77	A	B	C	D	E	F	Reflector, hood lamp
78	A	B	C	D	E	F	Label, menu
80	A	B	C	D	E	F	Cushion, base, right side, seal
81	A	B	C	D	E	F	Cushion, latch hook, pad
90	A	B	C	D	E	F	Label, Caution-DHHS
91	A	B	C	D	E	F	Label, Caution-monitor
92 #	A	B	C	D	E	F	Filter, inside exhaust, charcoal
93 #	A	B	C	D	E	F	Filter, grease, (2)
94	A	B	C	D	E	F	Clip, canoe type, stirrer cover
96 #	A	B	C	D	E	F	Filter, air, charcoal
98 #	A	-	C	D	E	-	Wiring Harness, control-B
98 #	-	B	-	-	-	F	Wiring Harness, control-B
99	A	B	C	D	E	F	Cushion, fan duct, seal
106	A	B	C	D	E	F	Screw, 3 mm x 8 mm
107	A	B	C	D	E	F	Screw, 4 mm x 8 mm, silver
107	A	B	C	D	E	F	Screw, 4 mm x 8 mm, black
108	A	B	C	D	E	F	Screw, 4 mm x 8 mm
109	A	B	C	D	E	F	Screw, 4 mm x 8 mm
110	A	B	C	D	E	F	Screw, 4 mm x 12 mm
111	A	B	C	D	E	F	Screw, 4 mm x 8 mm, Tap Tight
113	A	B	C	D	E	F	Screw, 3 mm x 6 mm
114	A	B	C	D	E	F	Screw
117	A	B	C	D	E	F	Holder, wire
130	A	B	C	D	E	F	Label, Caution-DHHS

Functional Parts
* Non-Illustrated Parts

FGBM185K / FGBM187K / FPBM189K

OVEN,CABINET

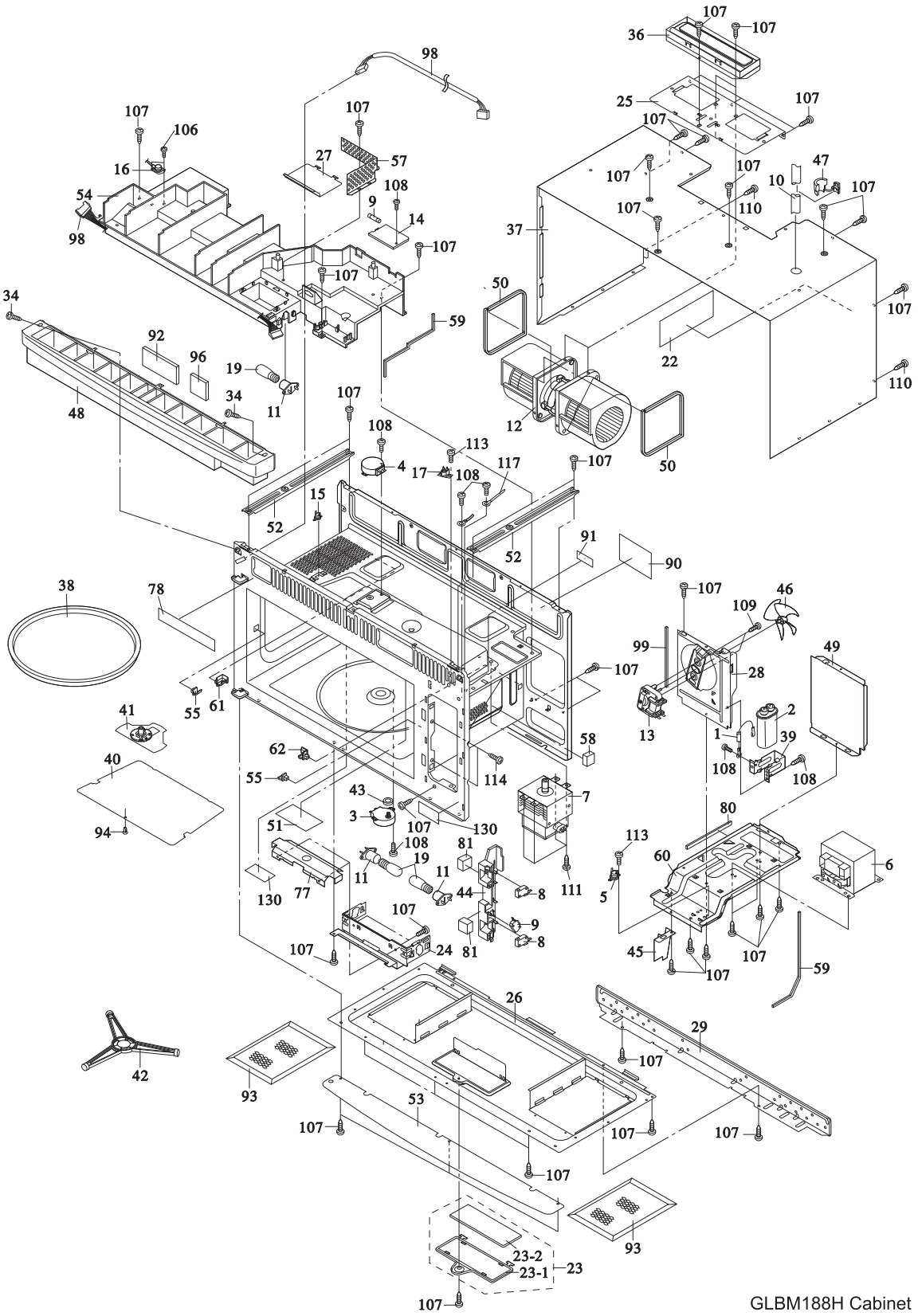

GLBM188H Cabinet

FGBM185K / FGBM187K / FPBM189K

CONTROL PANEL,DOOR,MISC.

Model Index:
A FGBM185K (FGBM185KBB)
B FGBM185K (FGBM185KFB)
C FGBM185K (FGBM185KWB)
D FGBM187K (FGBM187KBB)
E FGBM187K (FGBM187KWB)
F FPBM189K (FPBM189KFB)

POS. NO							DESCRIPTION
30 #	A	B	C	D	E	F	Control Board, printed circuit
31	A	-	-	D	-	-	Cover, control board, black
31	-	B	-	-	-	-	Cover, control board, black/stainless
31	-	-	C	-	E	-	Cover, control board, white
31	-	-	-	-	-	F	Cover, control board, gray/stainless
33	A	B	C	D	E	F	Panel, control mount
34	A	B	C	D	E	F	Screw, 3 mm x 8 mm
35	A	B	C	D	E	F	Screw, 3 mm x 10 mm
56	A	B	C	D	E	F	Door Stop
63	A	B	C	D	E	F	Cover, control display
64	A	B	-	D	-	-	Panel, inner door, black
64	-	-	C	-	E	-	Panel, inner door, white
64	-	-	-	-	-	F	Panel, inner door, gray
65	A	-	-	D	-	-	Frame, door, black, Gallery
65	-	B	-	-	-	-	Frame, door, black/stainless, Gallery
65	-	-	C	-	E	-	Frame, door, white, Gallery
65	-	-	-	-	-	F	Frame, door, gray/stainless, Pro
68	A	B	C	D	E	F	Latch, door
69	A	B	C	D	E	F	Spring, door latch
71	A	B	C	D	E	F	Frame, choke cover, inner door
72	A	B	C	D	E	F	Seal, door, film
73	A	-	-	-	-	-	Handle, door, black, Gallery
73	-	B	-	-	-	-	Handle, door, stainless, Gallery
73	-	-	C	-	-	-	Handle, door, white, Gallery
73	-	-	-	D	E	-	Handle, door, stainless, Gallery
73	-	-	-	-	-	F	Handle, door, stainless, Pro
76	A	B	C	D	E	F	Hardware Kit, installation
77	A	B	C	D	E	F	Sleeve, power cord, grommet
78	A	B	C	D	E	F	Screw, toggle
79	A	B	C	D	E	F	Screw, 5mm x 85mm
80	A	B	C	D	E	F	Screw, 4 mm x 8 mm, silver
81	A	B	C	D	E	F	Screw, 5mm x 35mm
82	A	B	C	D	E	F	Washer
83	A	B	C	D	E	F	Cushion, installation, rear
86	A	B	C	D	E	F	Template, installation, top
87	A	B	C	D	E	F	Template, installation, wall
88 #	A	B	C	D	E	F	Wire, ground
89 #	A	B	C	D	E	F	Wiring Harness, main
95	A	B	C	D	E	F	Rack, microwave oven, wire
100	A	B	C	D	E	F	Screw, 4 mm x 10 mm
101	A	B	C	D	E	F	Screw, 4 mm x 15 mm
118	A	B	C	D	E	F	Screw, 4 mm x 12 mm
200	A	B	-	D	-	-	Glass, door, gray
200	-	-	C	-	E	-	Glass, door, white
200	-	-	-	-	-	F	Glass, door, silver

Functional Parts
* Non-Illustrated Parts

FGBM185K / FGBM187K / FPBM189K

CONTROL PANEL,DOOR,MISC.

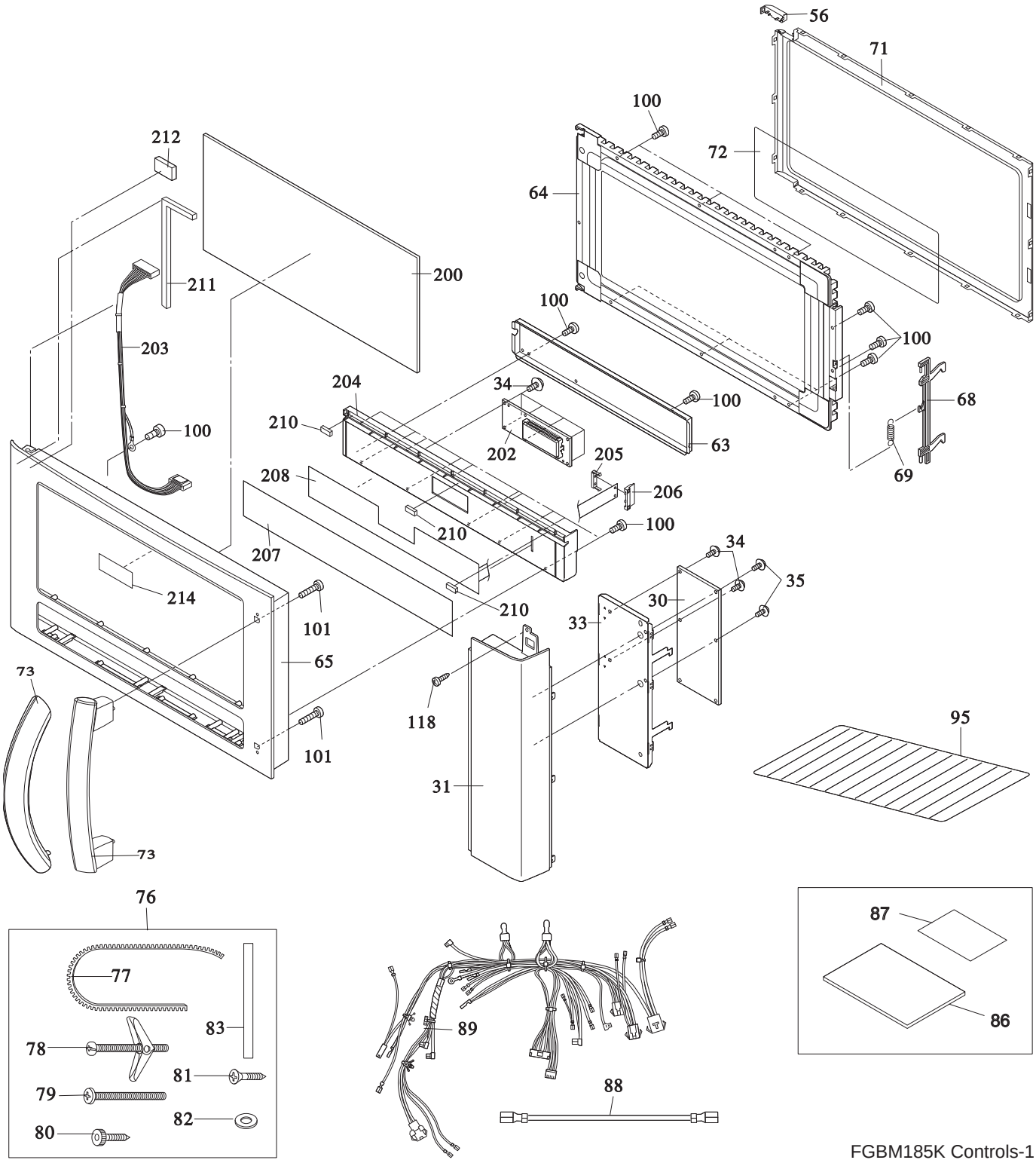

FGBM185K Controls-1

FGBM185K / FGBM187K / FPBM189K

CONTROL PANEL,DOOR,MISC.

Model Index:
A FGBM185K (FGBM185KBB)
B FGBM185K (FGBM185KFB)
C FGBM185K (FGBM185KWB)
D FGBM187K (FGBM187KBB)
E FGBM187K (FGBM187KWB)
F FPBM189K (FPBM189KFB)

POS. NO							DESCRIPTION
202#	A	B	C	D	E	F	Display, digital
203#	A	-	C	D	E	-	Wiring Harness, control-A
203#	-	B	-	-	-	F	Wiring Harness, control-A, w/ground wire
204	A	B	C	D	E	F	Frame, control panel, black
205	A	B	C	D	E	F	Connector, ribbon cable, left
206	A	B	C	D	E	F	Connector, ribbon cable, right
207	A	B	-	D	-	-	Overlay, touch control, black
207	-	-	C	-	E	-	Overlay, touch control, white
207	-	-	-	-	-	F	Overlay, touch control, silver
208#	A	B	C	D	E	F	Touch Control, key pad, black
210	A	-	C	D	E	-	Cushion, pad, control panel
210	-	B	-	-	-	F	Cushion, pad, control panel
211	A	-	C	D	E	-	Cushion, door, seal
212	A	-	C	D	E	-	Cushion, door, pad
214	A	B	C	D	E	-	Badge, nameplate, Gallery
214	-	-	-	-	-	F	Badge, nameplate, Pro

Functional Parts
* Non-Illustrated Parts

FGBM185K / FGBM187K / FPBM189K

CONTROL PANEL,DOOR,MISC.

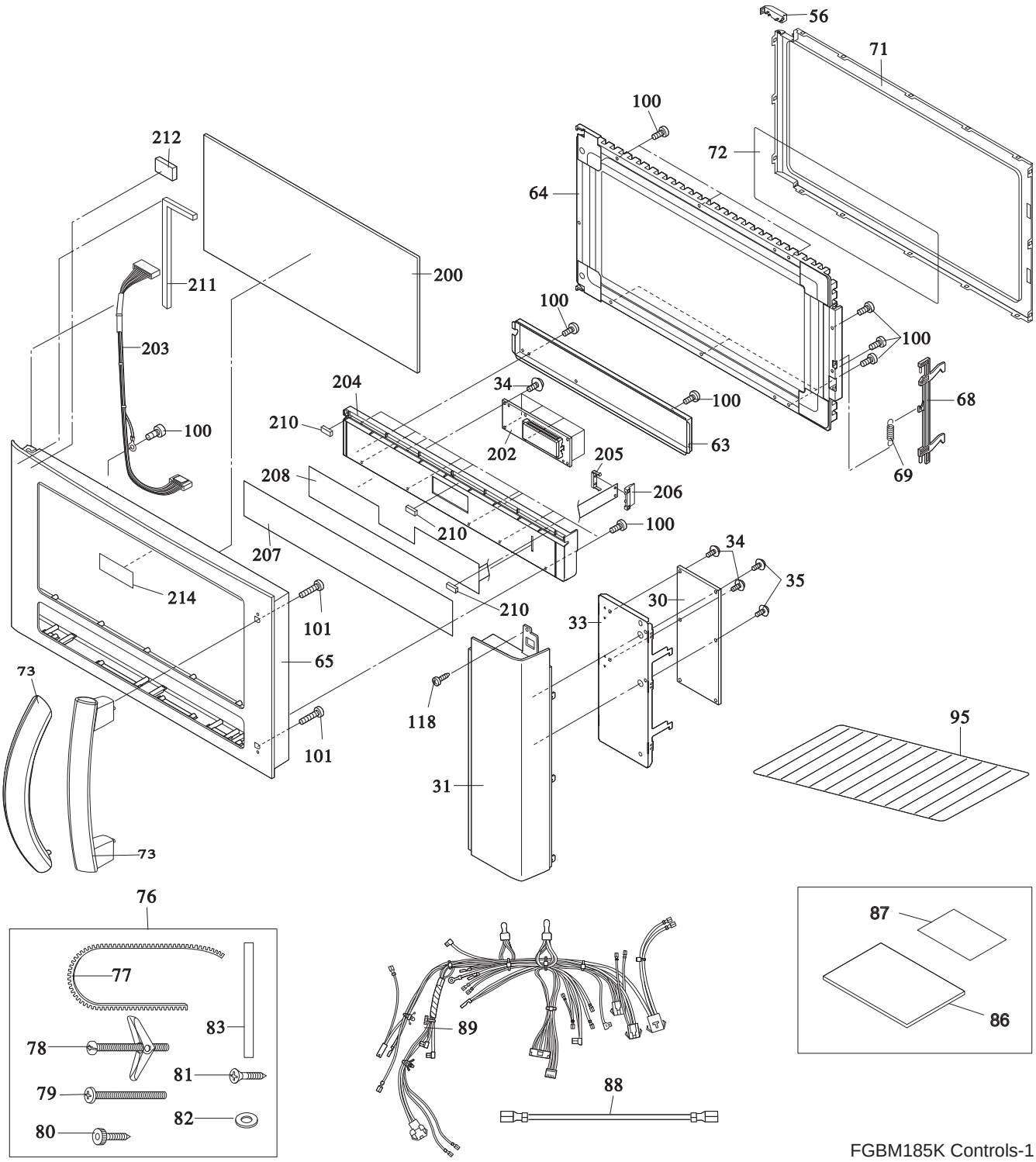

FGBM185K Controls-1